MB1186 - Assembly Instructions

High Clearance Receiver Hitch

Compatible with JT Gladiator w/ MB1262 Tomahawk Rear Bumper

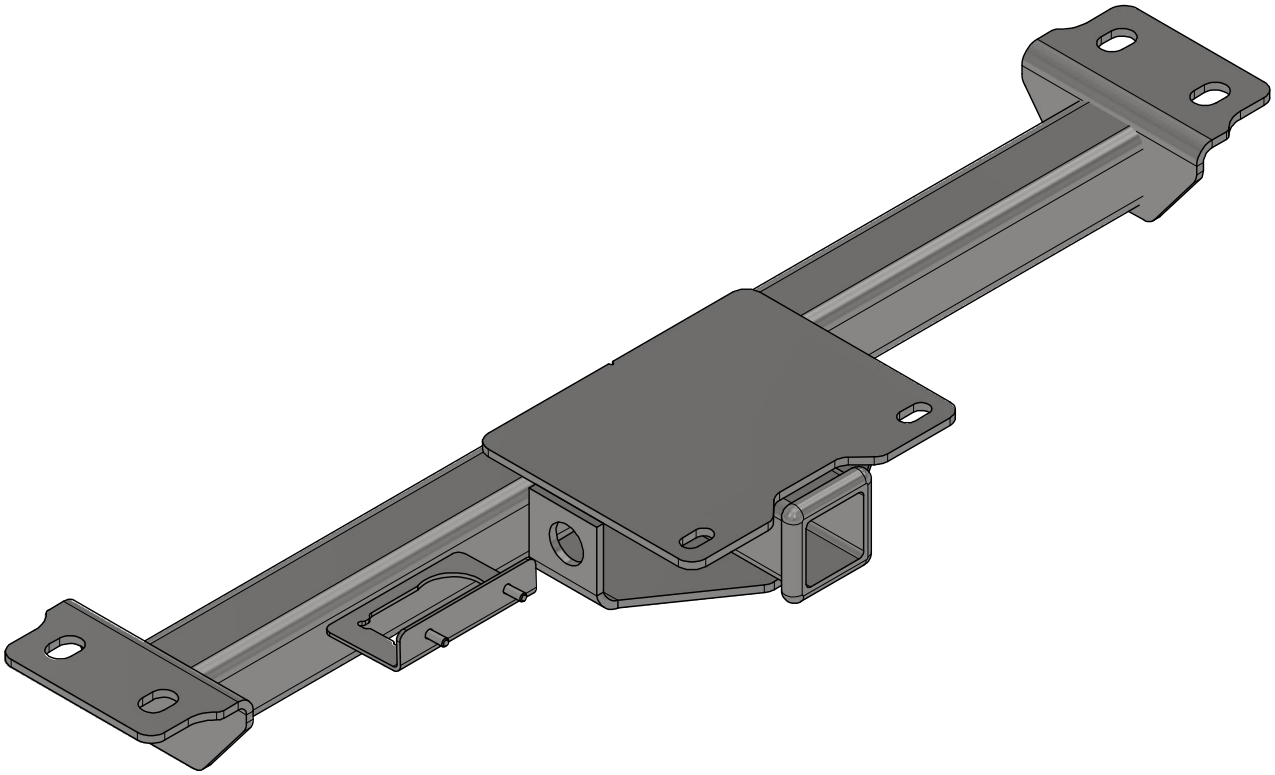

ASSEMBLY INSTRUCTIONS

MB1186

CONTENTS

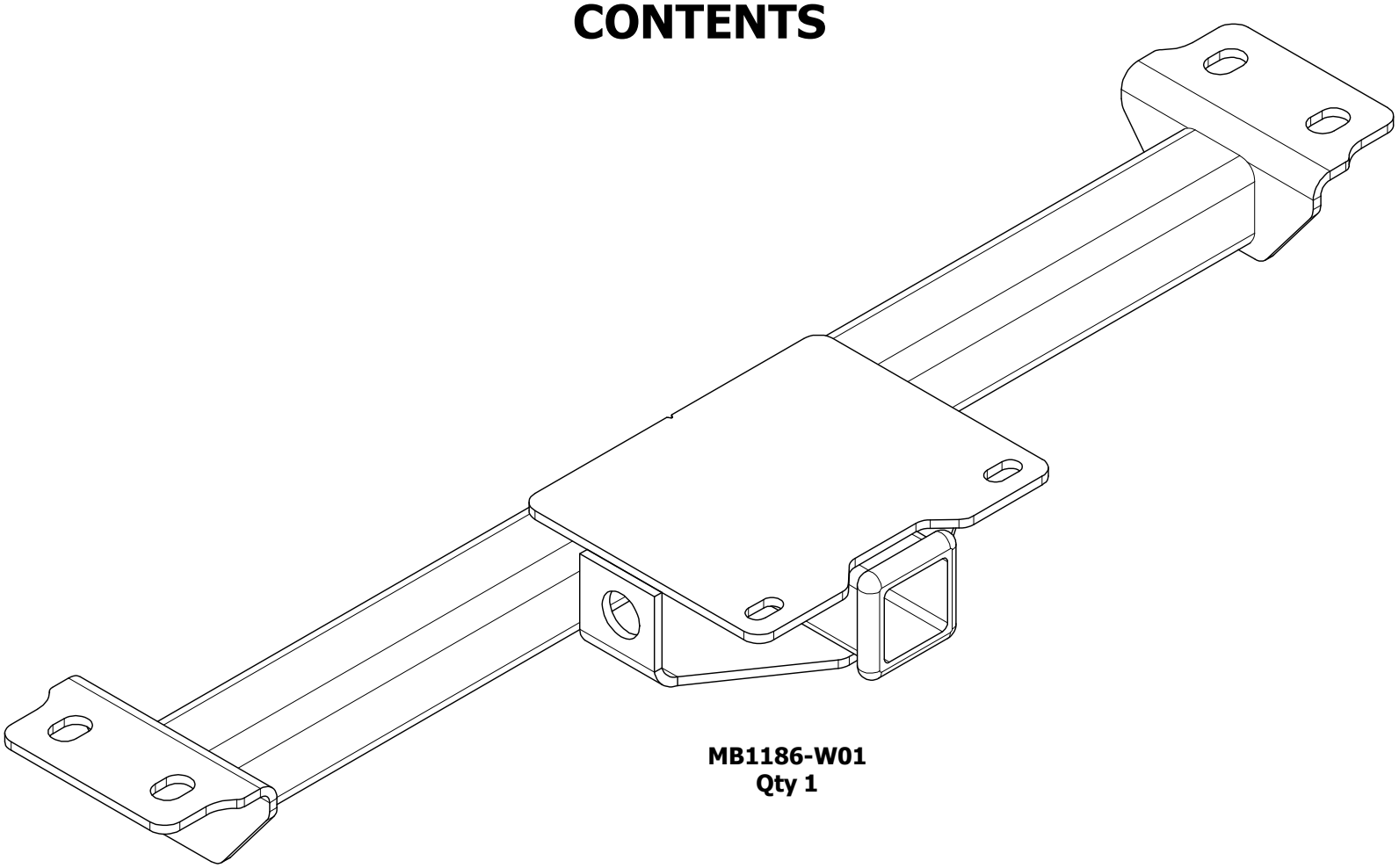

MB1186-W01
Qty 1

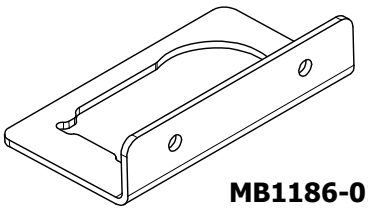

MB1186-01
Qty 1

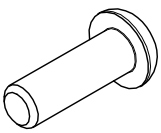

1/4-20 x 3/4" BHS-SS
Qty 2

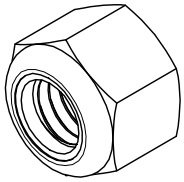

1/2"-13 Nylock Nut G8 YZ
Qty 2

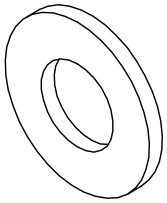

1/2" Flat Washer G8 YZ
Qty 4

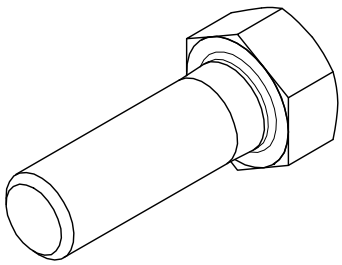

Bolt, Hex 1/2"-13 x 1.50"
Qty 2



Preparation and Installation Guide

Compatibility: This product fits Jeep JT Gladiator equipped with MB1262 Tomahawk Rear Bumper and is designed to give you the ability to use a hitch while still having a super high clearance profile.

1. **Prepare and Inspect:** Unbox and inspect all components to ensure everything is included and free of damage.

2. **Finishing:** For long-term protection, bare metal parts must be painted or powder coated before installation to prevent rust or corrosion.

Pro Tip: Use STEEL-IT paint, which can be welded through and easily touched up afterward.

MB1186 - Assembly Instructions

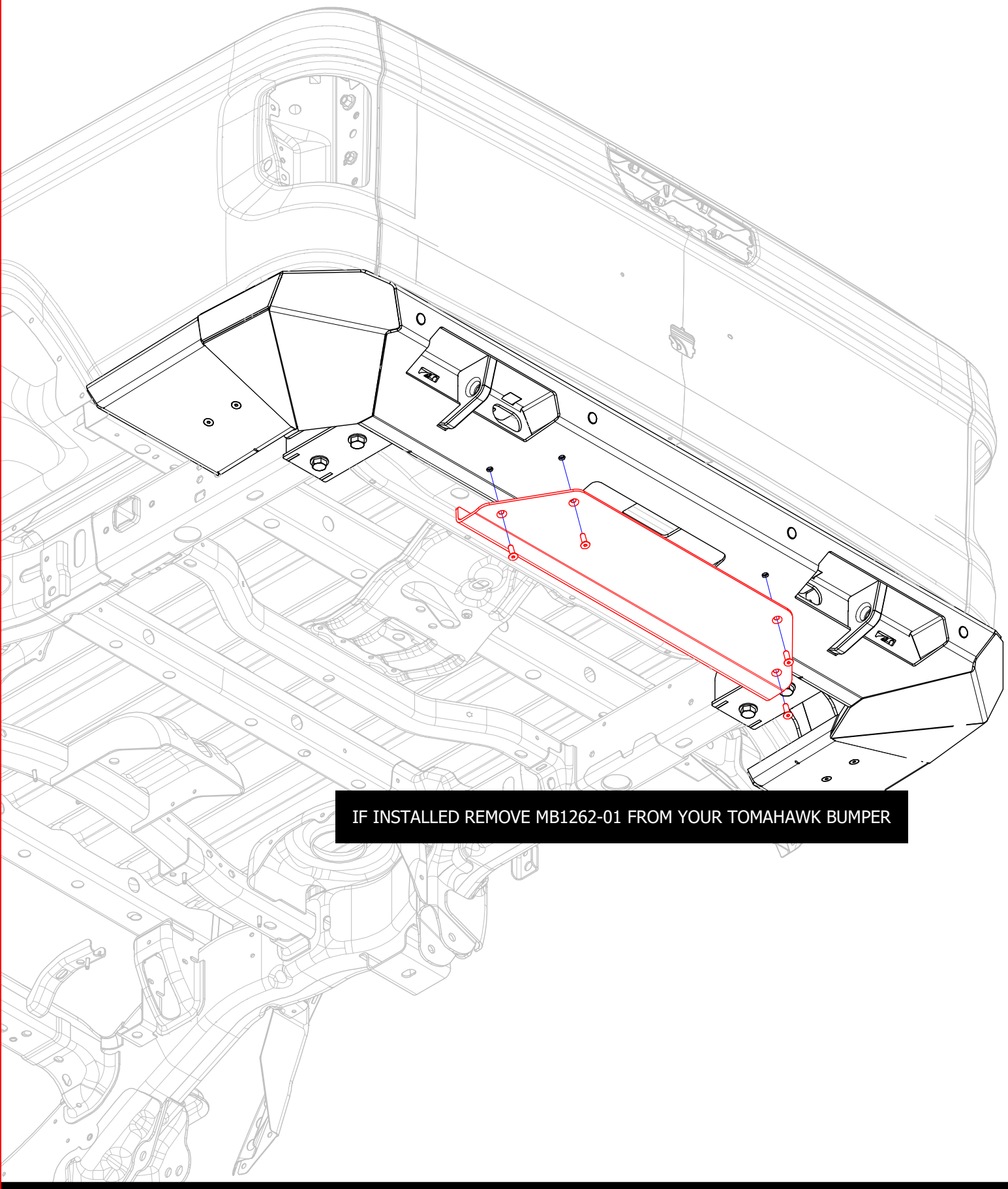

IF INSTALLED REMOVE MB1262-01 FROM YOUR TOMAHAWK BUMPER

MB1186 - Assembly Instructions

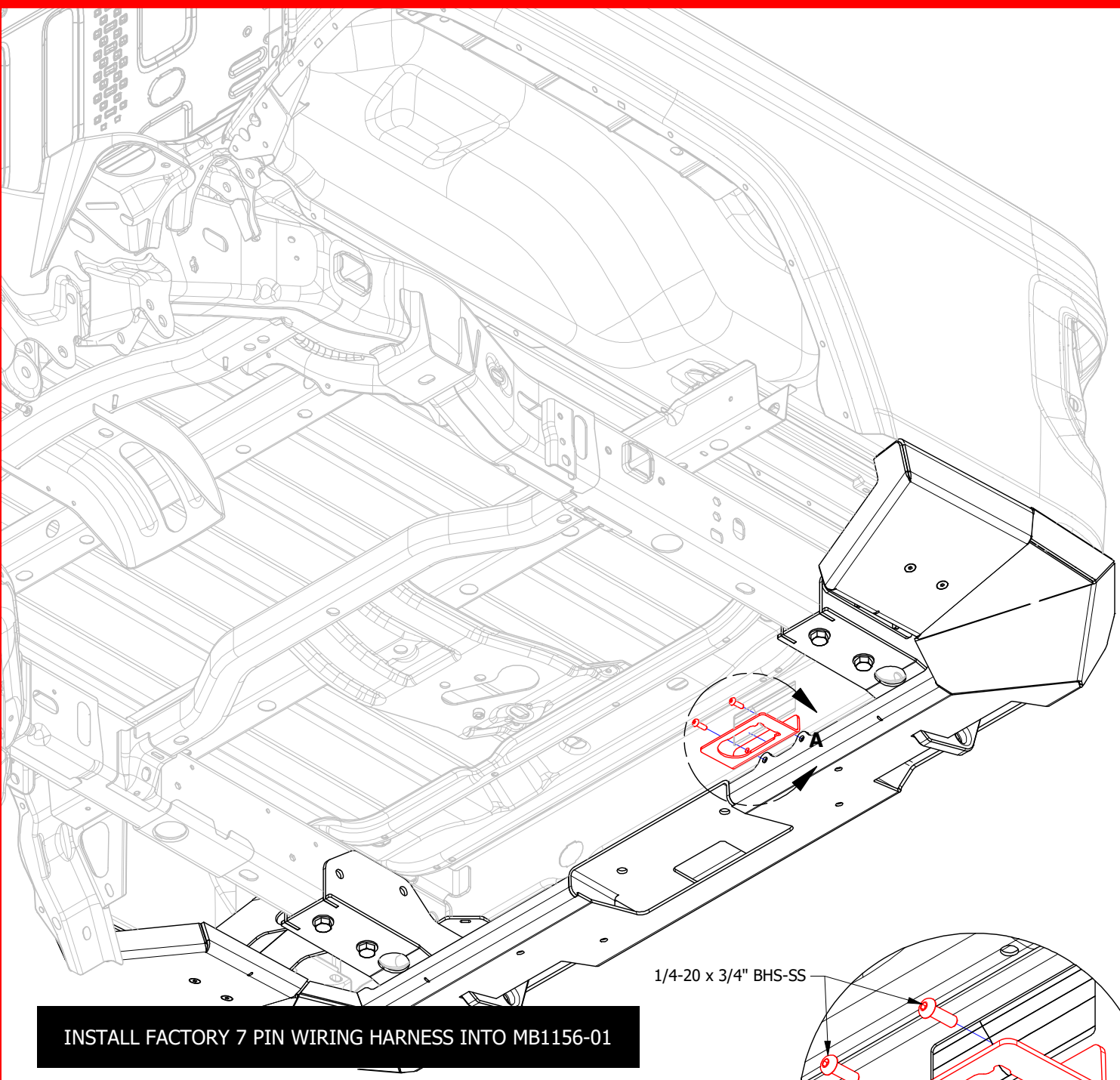

INSTALL FACTORY 7 PIN WIRING HARNESS INTO MB1156-01

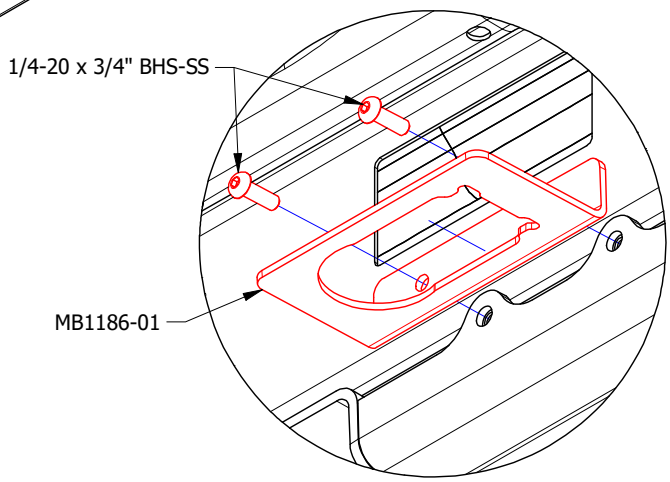

DETAIL A
SCALE 1 / 3

MB1186 - Assembly Instructions

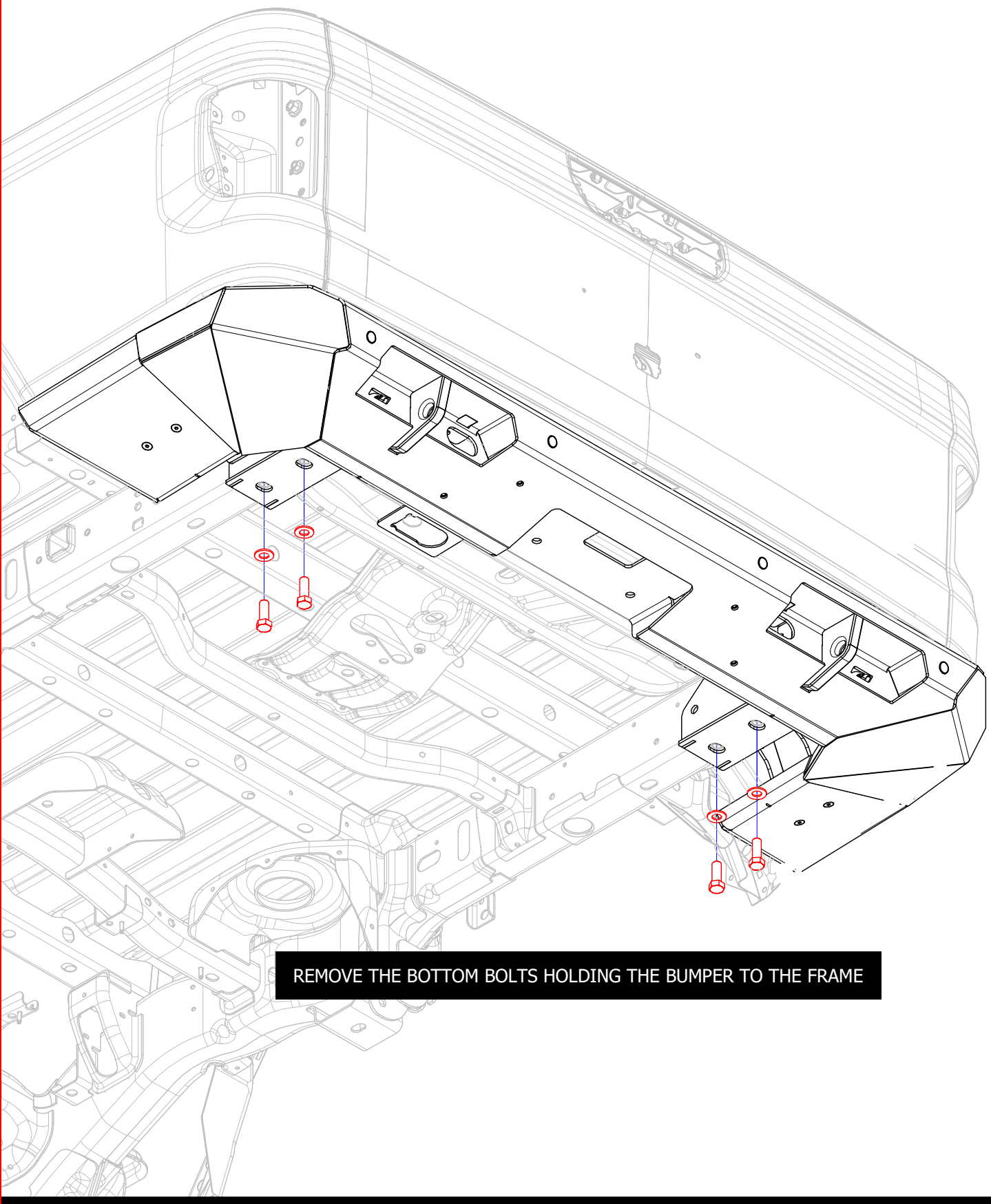

REMOVE THE BOTTOM BOLTS HOLDING THE BUMPER TO THE FRAME

MB1186 - Assembly Instructions

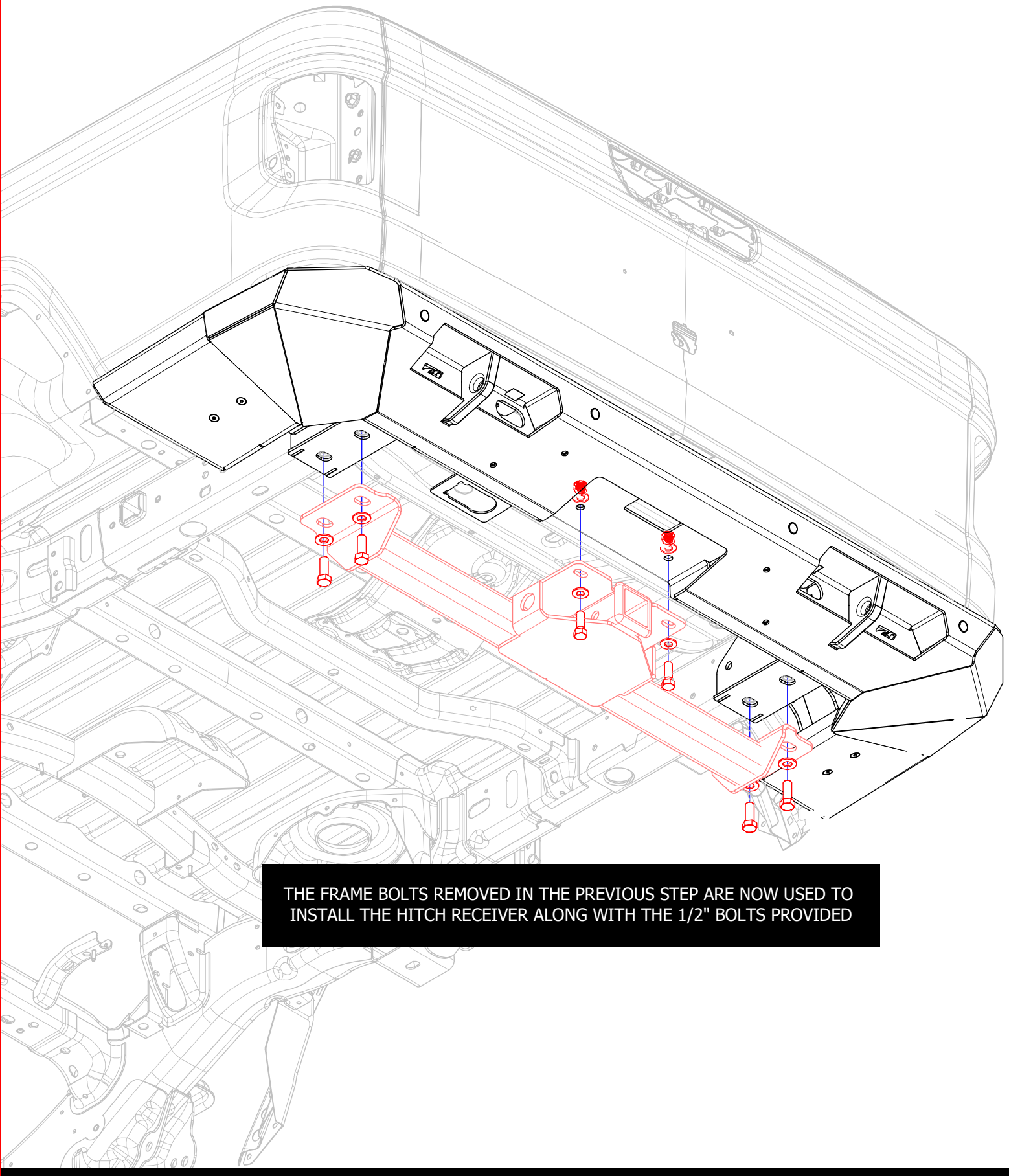

THE FRAME BOLTS REMOVED IN THE PREVIOUS STEP ARE NOW USED TO INSTALL THE HITCH RECEIVER ALONG WITH THE 1/2" BOLTS PROVIDED

LEGAL DISCLAIMER

Motobilt, Inc. products are designed and manufactured primarily for **OFF-ROAD USE ONLY**. They are not certified or approved for street or highway use and may not comply with vehicle safety standards or regulations. Vehicle modifications, including the installation of Motobilt, Inc. products, may alter the handling, performance, and durability of a vehicle.

By purchasing, installing, or using any Motobilt, Inc. product, the purchaser and installer expressly acknowledge and agree to the following terms:

1. ASSUMPTION OF RISK
The purchaser and installer understand and accept that the installation and use of aftermarket products involve inherent risks, including but not limited to vehicle damage, property damage, serious injury, or death. All such risks are voluntarily assumed.

2. NO WARRANTY OF SAFETY
Motobilt, Inc. makes no representations, warranties, or guarantees, express or implied, regarding the safety, performance, or structural integrity of its products. Motobilt, Inc. products are not intended to prevent injury or death in the event of an accident, rollover, or collision.

3. INSTALLATION RESPONSIBILITY
Some Motobilt products require advanced fabrication, cutting, or welding skills. Others may require specialized tools or mechanical knowledge. Motobilt, Inc. is not responsible for improper installation, modification, or misuse of its products. Professional installation by a qualified individual is strongly recommended.

4. COMPLIANCE WITH LAWS AND REGULATIONS
The purchaser and installer are solely responsible for ensuring that the vehicle and installed products comply with all applicable local, state, and federal laws and safety regulations. Vehicle modifications may void factory warranties and may render the vehicle illegal for use on public roads.

5. MAINTENANCE AND INSPECTION
All products should be inspected regularly for signs of wear, fatigue, or damage. Continued use of damaged or improperly installed equipment increases the risk of failure and potential injury. The responsibility for inspection and maintenance rests solely with the owner and operator.

6. WARRANTY DISCLAIMER
Unless expressly stated in a written limited warranty issued by Motobilt, Inc. for a specific product, all Motobilt, Inc. products are sold "as is" and without express warranties of any kind. If a written limited warranty applies, its terms are exclusive and govern the extent of Motobilt, Inc. obligations.

To the fullest extent permitted by law, Motobilt, Inc. expressly disclaims all implied warranties, including but not limited to implied warranties of merchantability, fitness for a particular purpose, and non-infringement. No oral or written statement by Motobilt, Inc., its employees, dealers, or representatives shall constitute or create any warranty, obligation, or liability beyond what is contained in official written documentation issued by Motobilt, Inc.

7. LIMITATION OF LIABILITY
To the fullest extent permitted by law, Motobilt, Inc. disclaims all liability for any direct, indirect, incidental, consequential, or punitive damages arising out of the purchase, installation, or use of its products. This includes, but is not limited to, claims for property damage, personal injury, loss of use, or loss of income.

8. USER ACKNOWLEDGMENT
By purchasing, installing, or using Motobilt, Inc. products, the purchaser and installer acknowledge that they have read, understood, and accepted the terms of this disclaimer and voluntarily assume all associated risks.