MB1258 - Assembly Instructions Frame Mounted Rocker Guards for 4 Door

FRAME MOUNTED ROCKER GUARDS FOR AFTERMARKET LONG ARM SUSPENSIONS

Compatible with 2007-2018 JKU 4 Door
Compatible with 2018-Present JLU 4 Door

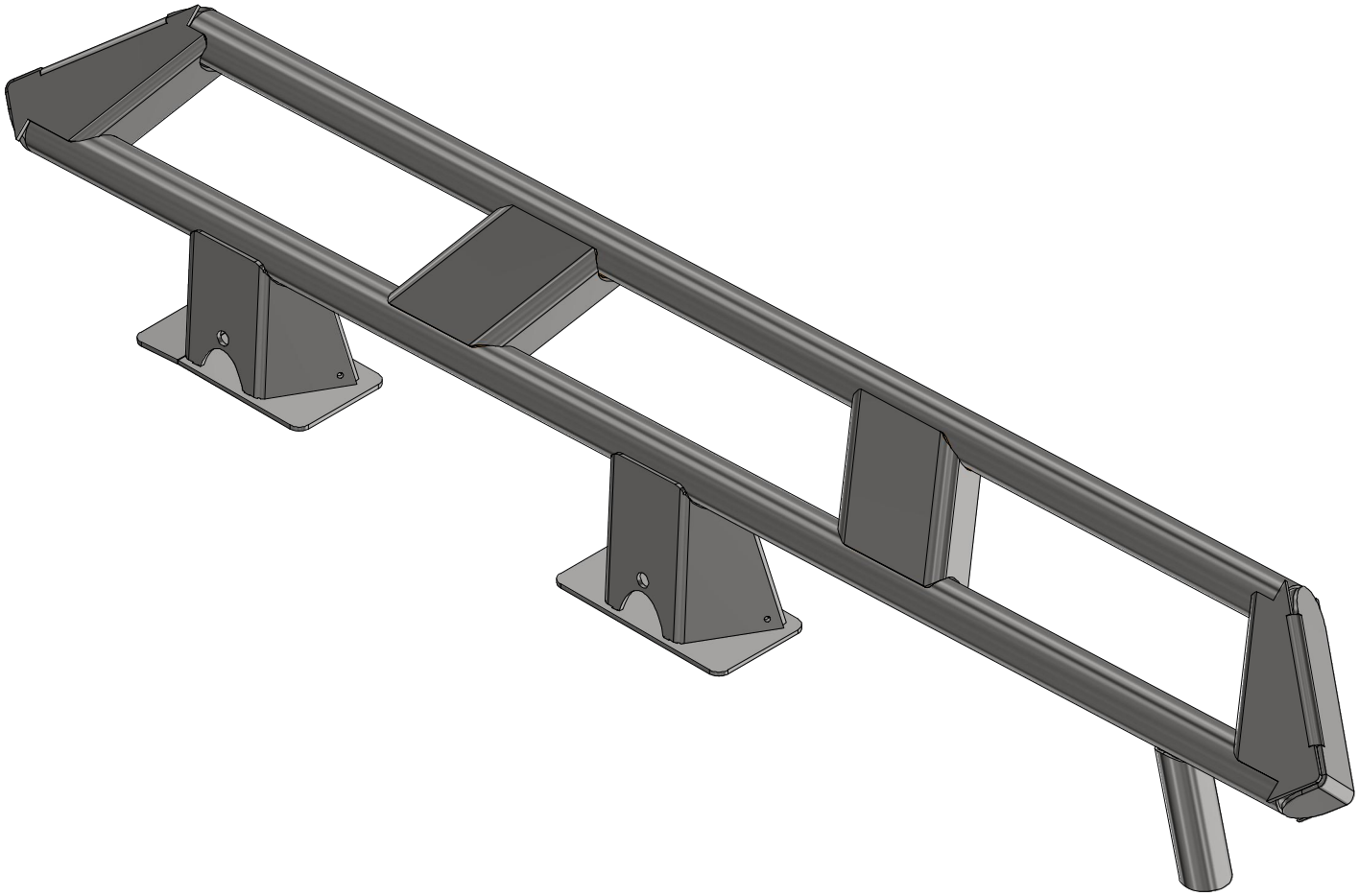

ASSEMBLY INSTRUCTIONS

MB1258 - Assembly Instructions Frame Mounted Rocker Guards for 4 Door

CONTENTS

Compatible with 2007-2018 JKU 4 Door
Compatible with 2018-Present JLU 4 Door

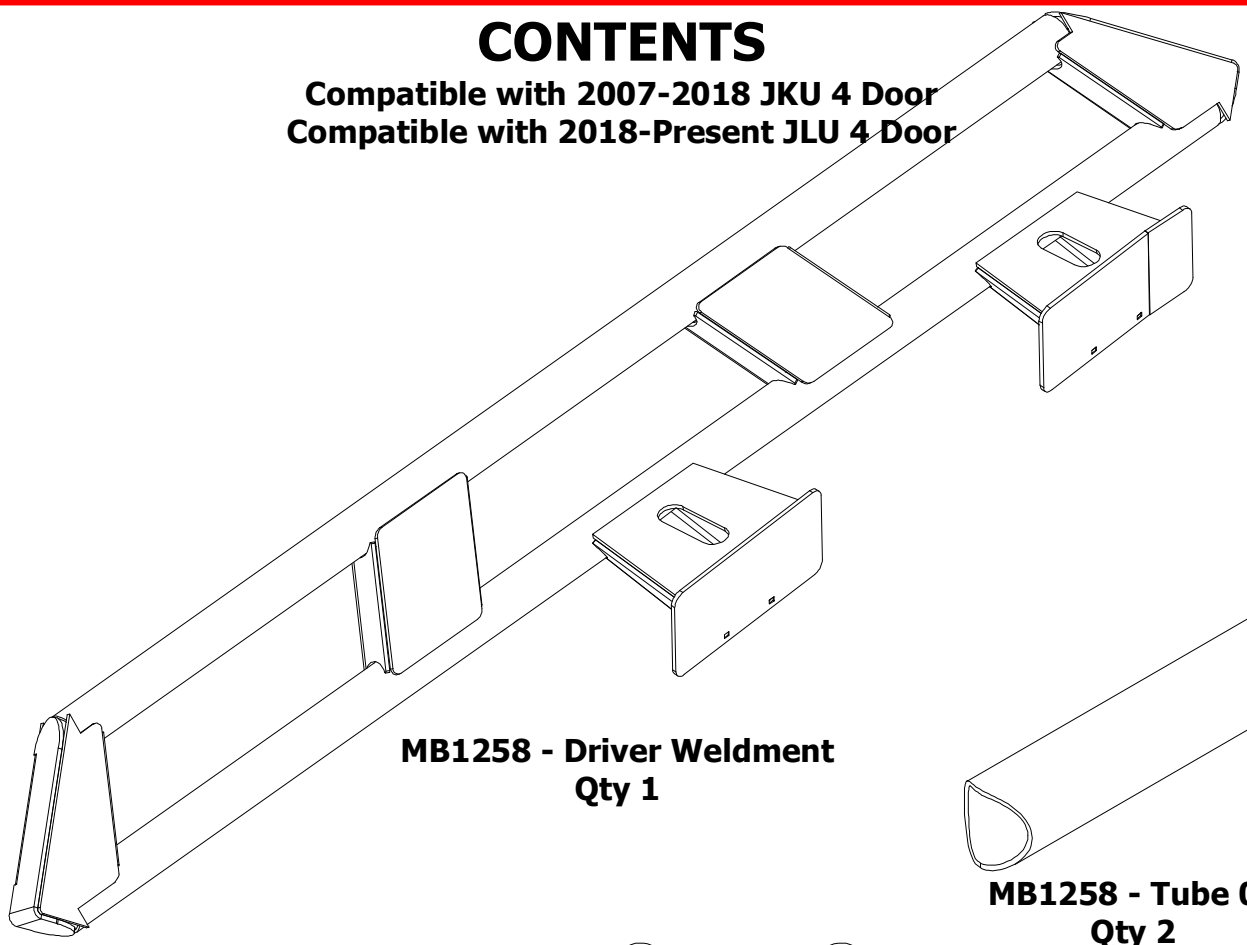

MB1258 - Driver Weldment
Qty 1

MB1258 - Tube 03
Qty 2

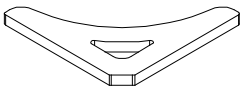

MB2098-90
Qty 8

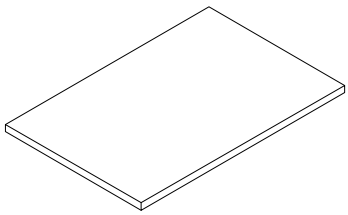

MB1258-17
Qty 2

MB1258 - Passenger Weldment
Qty 1

MB1258-250 - Assembly Instructions Frame Mounted Rocker Guards for 4 Door

CONTENTS

Compatible with 2007-2018 JKU 4 Door
Compatible with 2018-Present JLU 4 Door

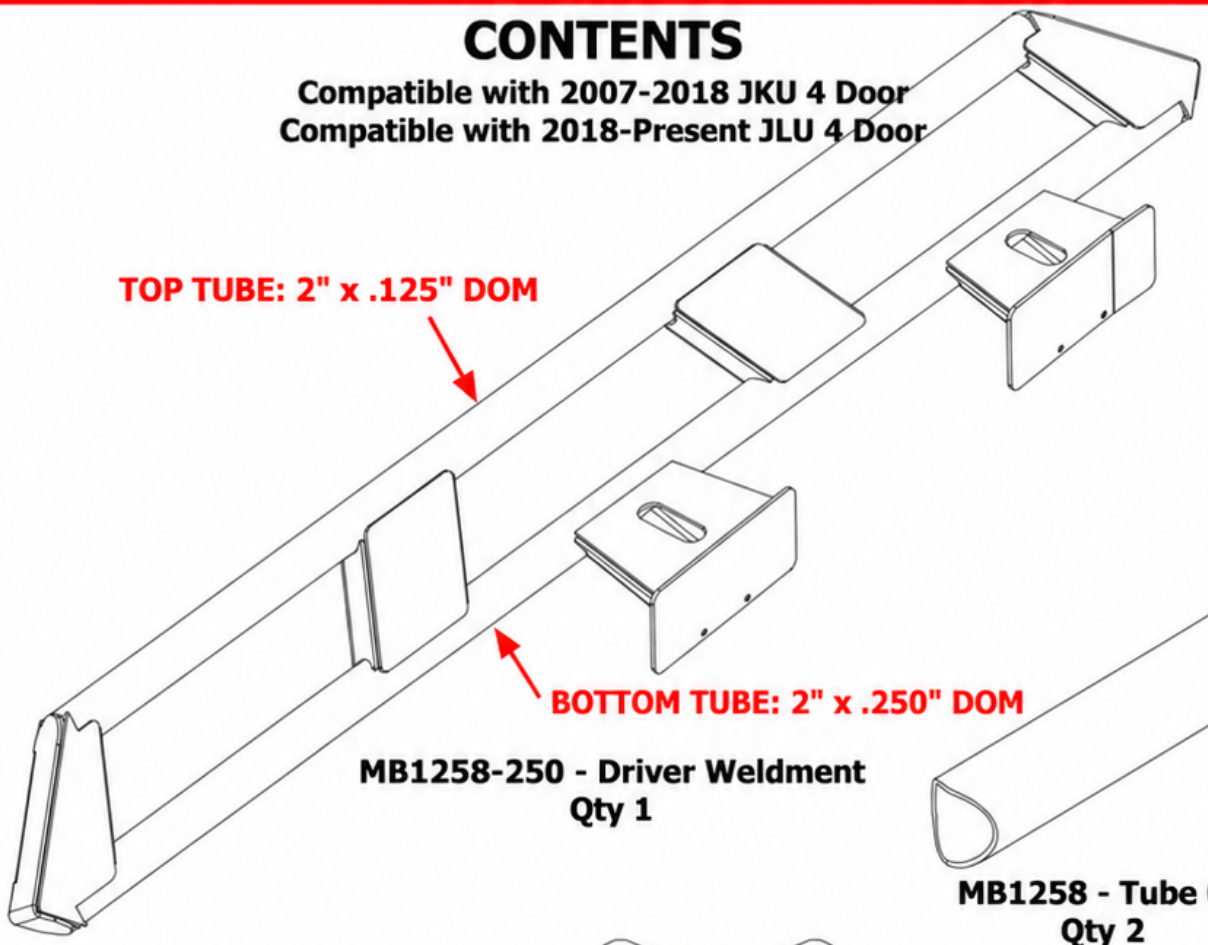

MB1258-250 - Driver Weldment
Qty 1

MB1258 - Tube 03
Qty 2



MB2098-90
Qty 8

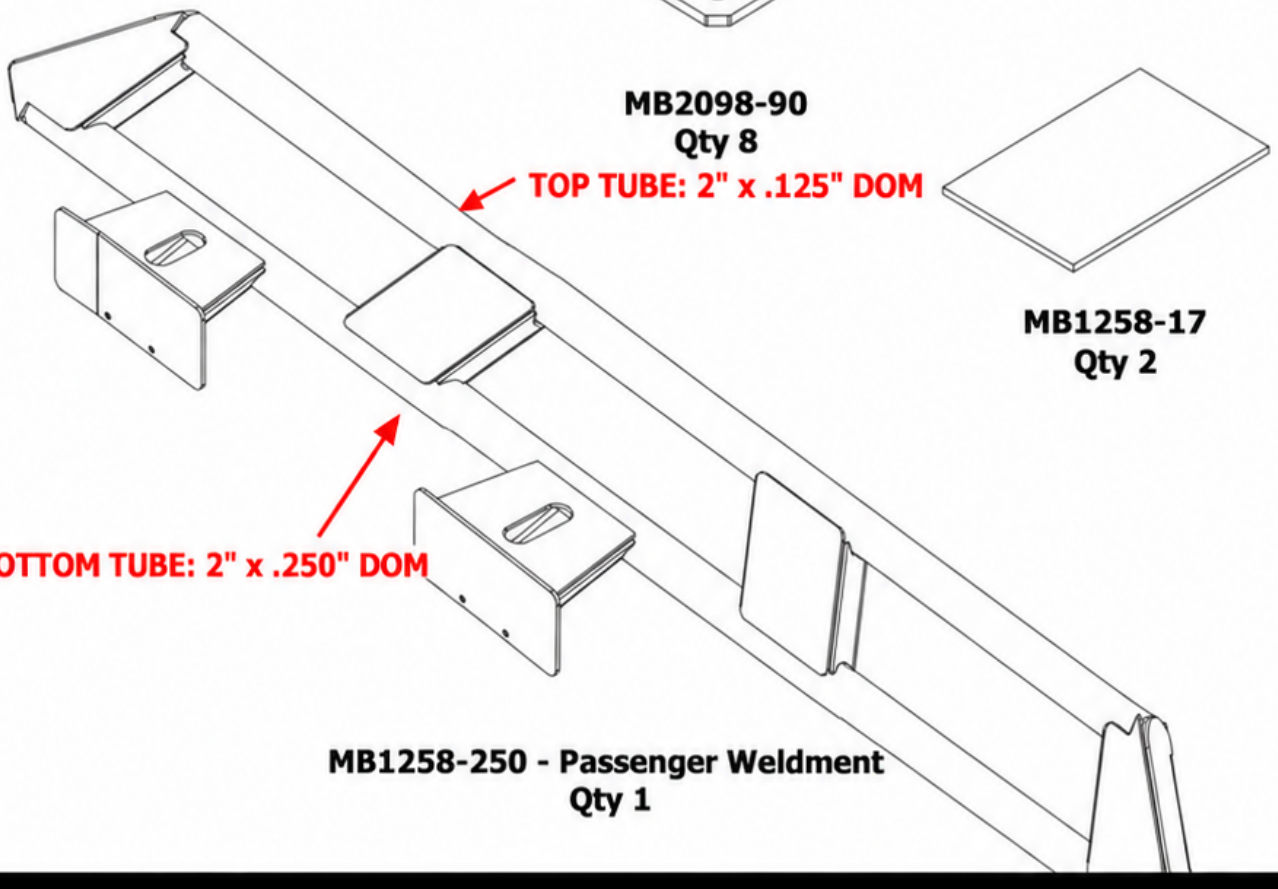

MB1258-17
Qty 2

MB1258-250 - Passenger Weldment
Qty 1

MB1258 - Assembly Instructions Frame Mounted Rocker Guards for 4 Door

Preparation and Installation Guide

Compatibility: This product fits Jeep JKU and Jeep JLU 4 Door models. The assembly instructions feature a Jeep JLU body and frame, but the same procedures apply to the Jeep JKU model.

1. **Disconnect Batteries:** Before starting the installation, disconnect all batteries.

2. **Install Lower Rocker Armor:** If you plan to install lower rocker armor (e.g., MB1014 for Jeep JKU 2 Door or MB1195 for Jeep JLU 2 Door), do this first before proceeding with the weld-on Rocker Guards.

3. **Prepare for Welding:**
   Cover or mask all painted areas, glass, mirrors, and trim.
   Ensure you have a fire extinguisher on hand.

4. **Paint or Powder Coat Parts:** Paint or powder coat all parts before installation. Note that welding will require touch-ups on painted areas.

5. **Remove Factory Paint:** Remove factory paint from the frame where welding will occur.

6. **Weld the Product:** Weld the product to the frame of the vehicle.

7. **Touch Up Paint**: After welding, touch up the frame and any affected areas with paint.

Pro Tip: Use STEEL-IT paint, which can be welded through and easily touched up afterward.

MB1258 - Assembly Instructions Frame Mounted Rocker Guards for 4 Door

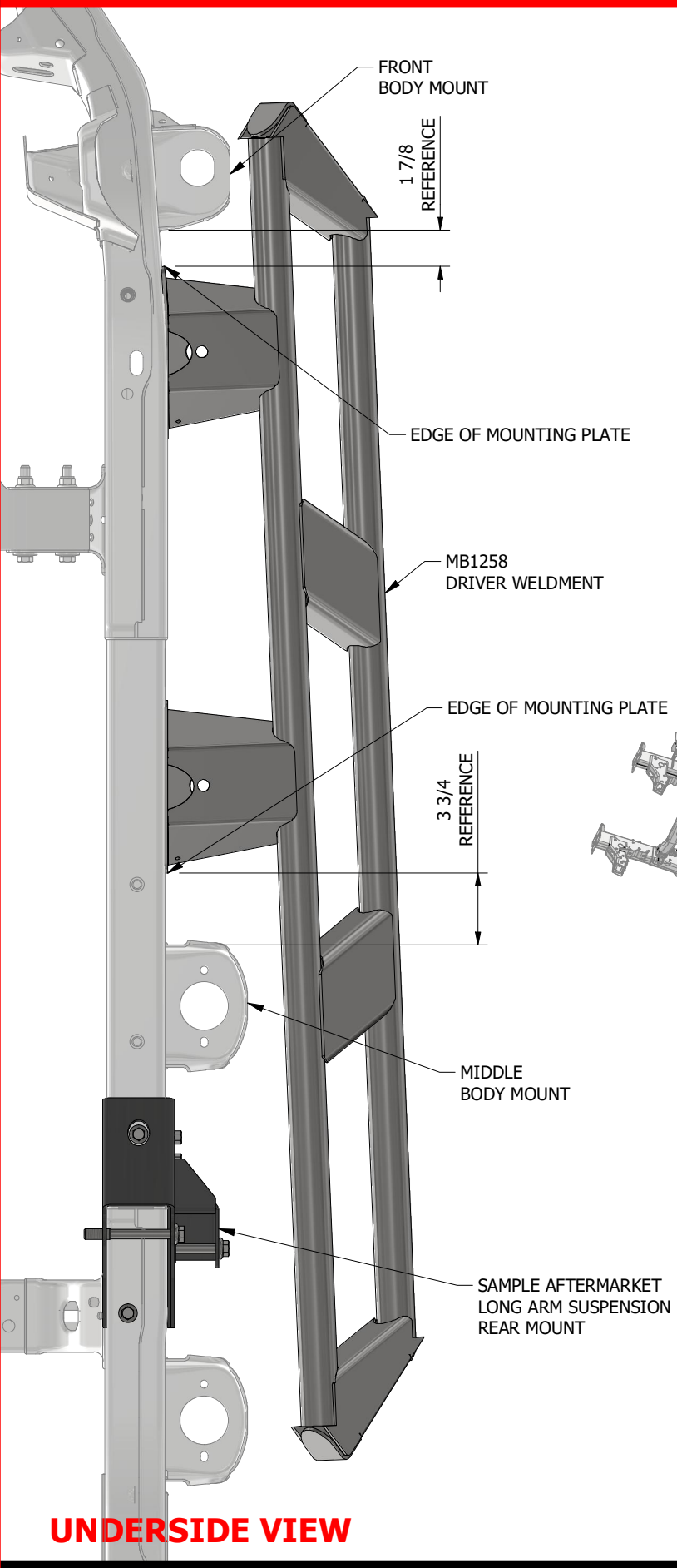

UNDERSIDE VIEW

STEP 1

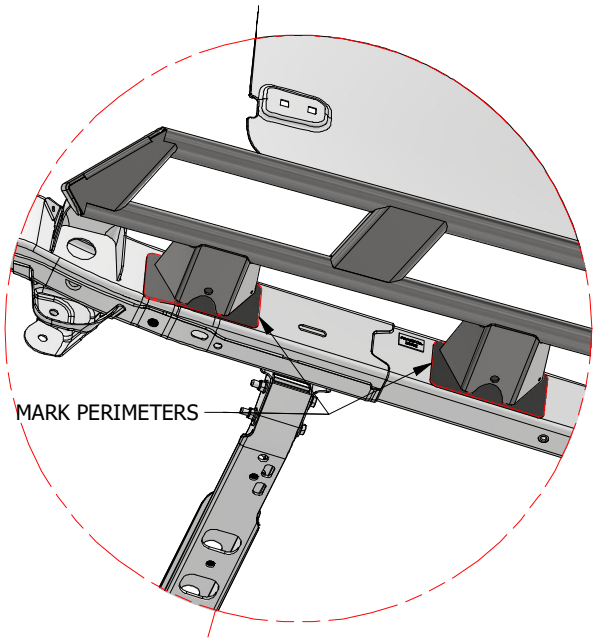

DETAIL A

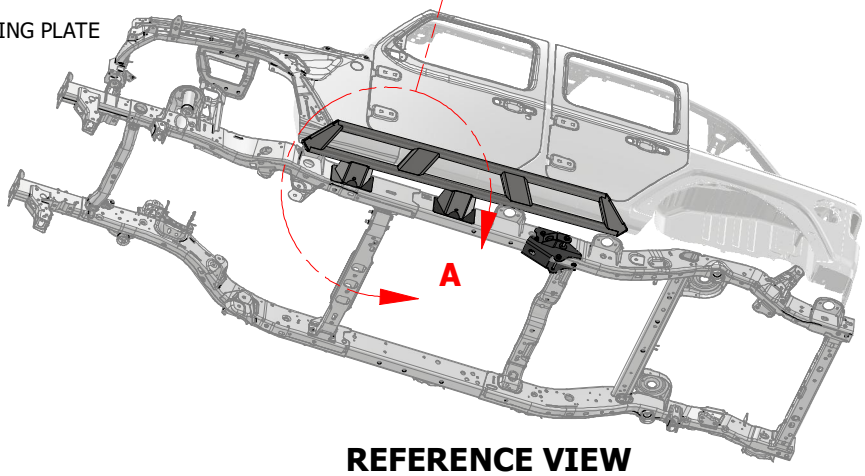

REFERENCE VIEW

1. CLAMP THE DRIVER WELDMENT TO THE FRAME IN THE POSITION AS SHOWN.
2. MARK THE PERIMETER OF THE MOUNTING PLATES.
3. UNCLAMP & REMOVE THE DRIVER WELDMENT.
4. GRIND PAINT OFF FRAME IN MARKED LOCATIONS.
5. REINSTALL & CLAMP DRIVER WELDMENT IN POSITION SHOWN.
6. TACK WELD MOUNTING PLATES TO FRAME.

REPEAT ON PASSENGER SIDE

MB1258 - Assembly Instructions Frame Mounted Rocker Guards for 4 Door

STEP 2

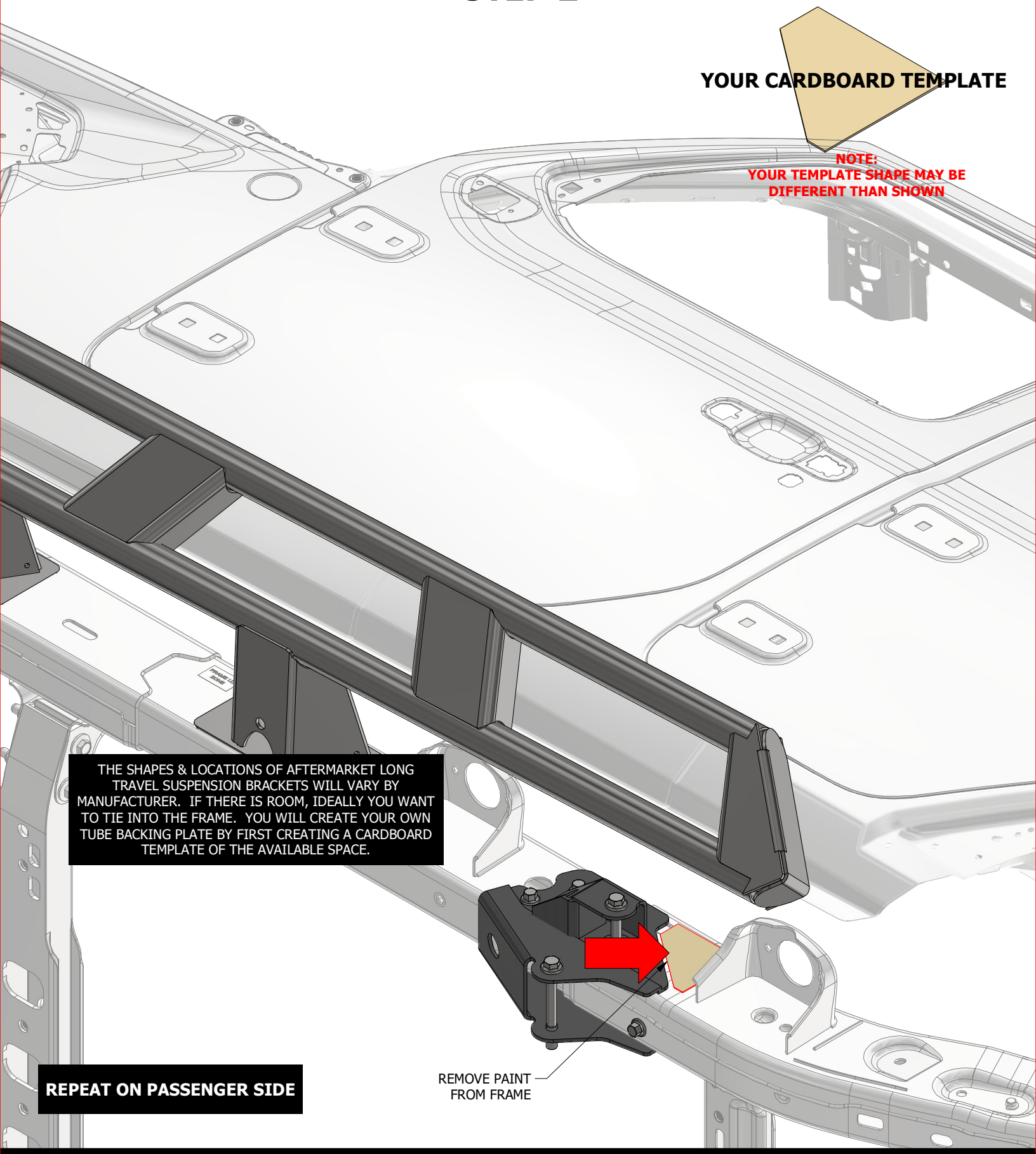

MB1258 - Assembly Instructions Frame Mounted Rocker Guards for 4 Door

STEP 3

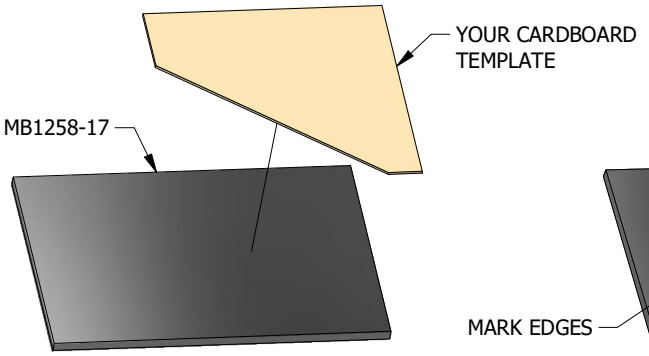

POSITION

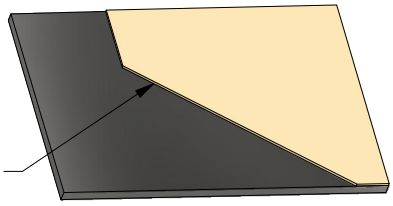

MARK

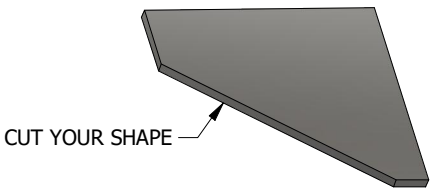

CUT

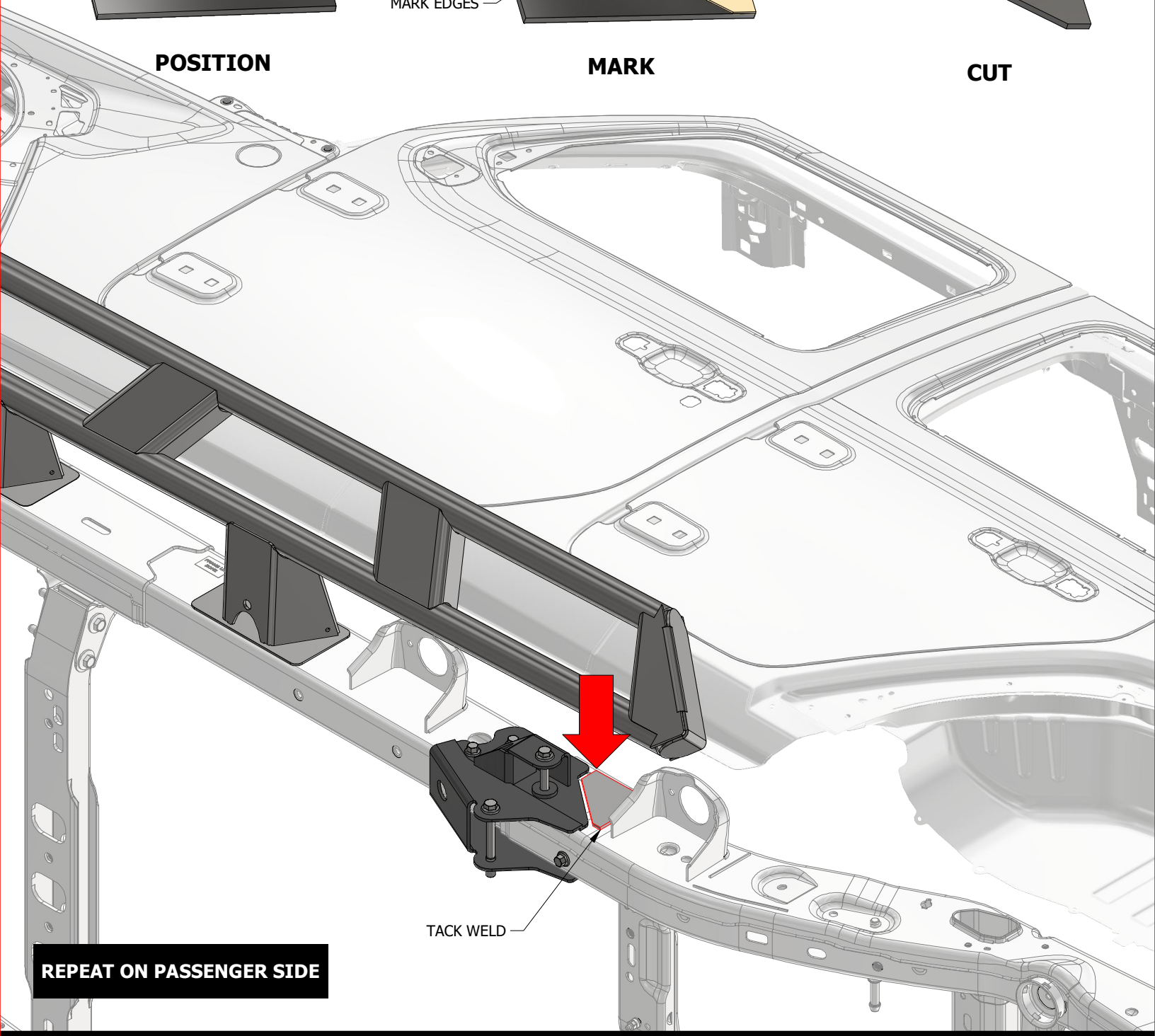

REPEAT ON PASSENGER SIDE

MB1258 - Assembly Instructions Frame Mounted Rocker Guards for 4 Door

STEP 4

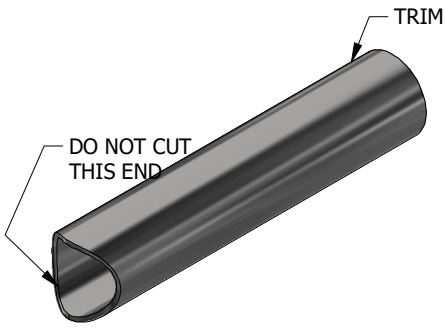

MB1258-TUBE 03
BEFORE YOUR CUSTOM TRIMMING



MB1258-TUBE 03
AFTER YOUR CUSTOM TRIMMING

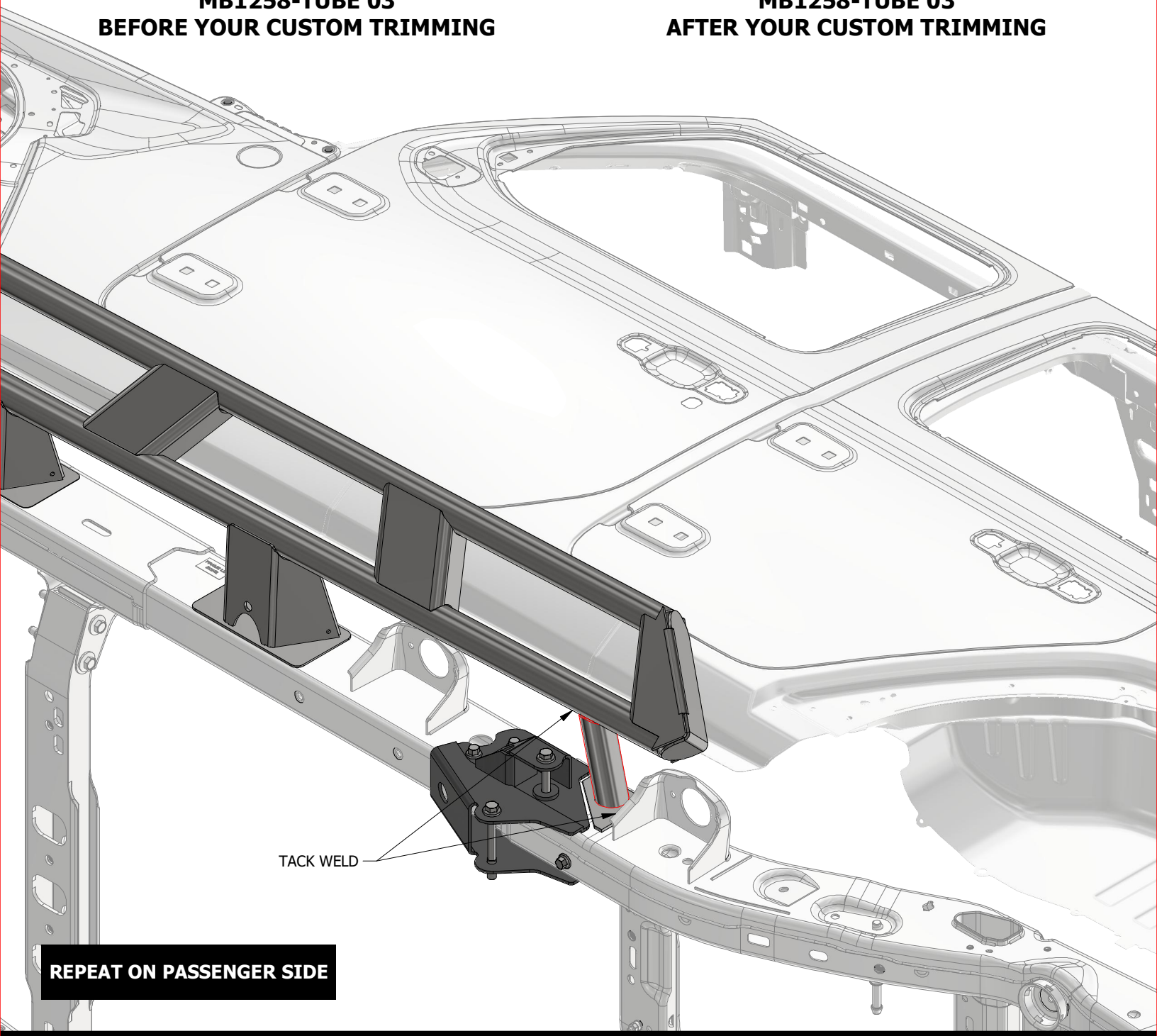

REPEAT ON PASSENGER SIDE

MB1258 - Assembly Instructions Frame Mounted Rocker Guards for 4 Door

STEP 5

ONCE ALL PARTS ARE INSTALLED & TACK WELDED, FULLY WELD THE PERIMETERS OF THE MOUNTING PLATES AND TUBES YOU INSTALLED.

TOUCH UP ALL PAINT WHERE NEEDED.

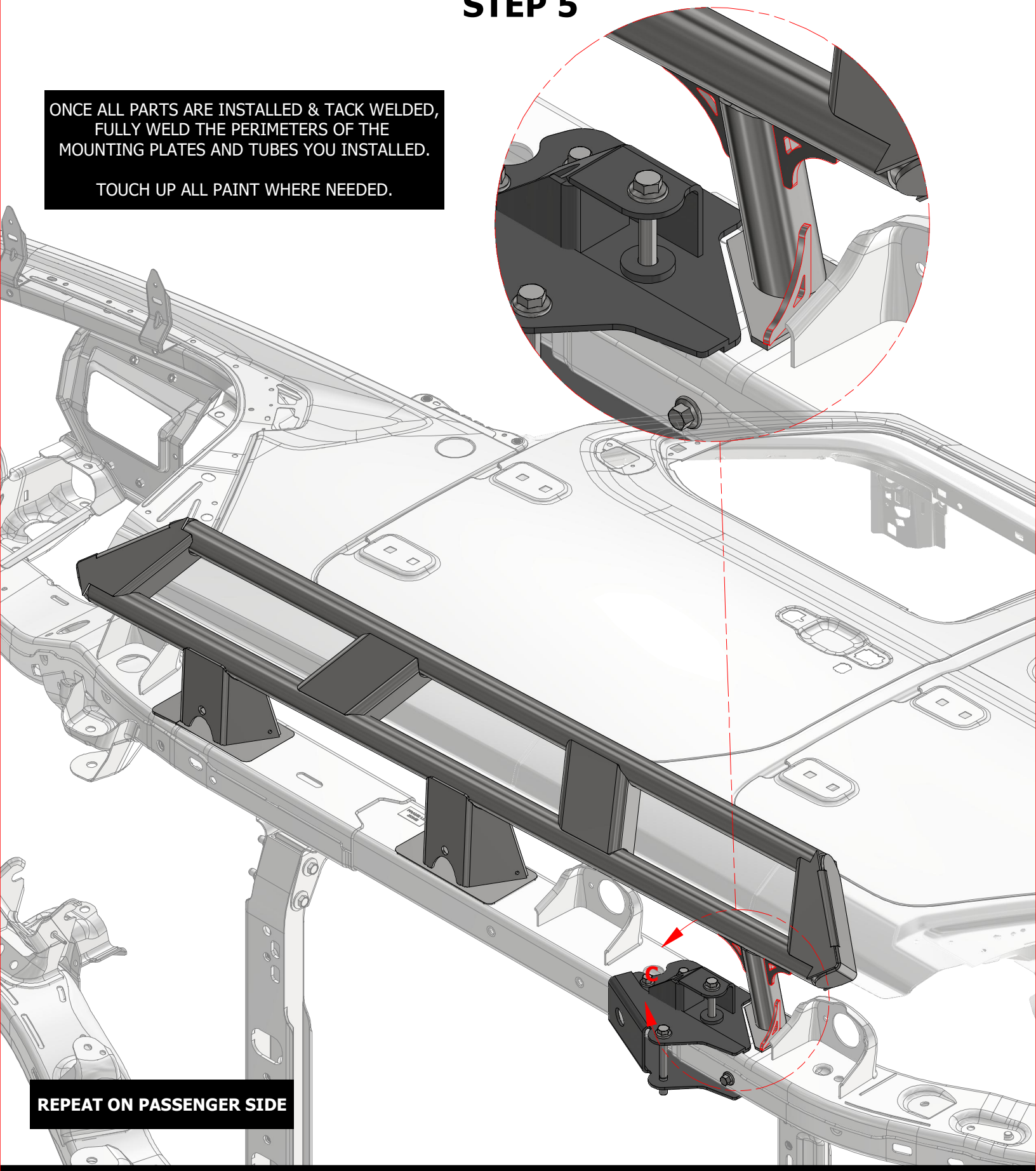

REPEAT ON PASSENGER SIDE

ALTERNATIVE TUBE POSITIONING

YOUR AFTERMARKET SUSPENSION MAY HAVE ALTERNATIVE PLACES TO POSITION THE SUPPLIED MOUNTING TUBE

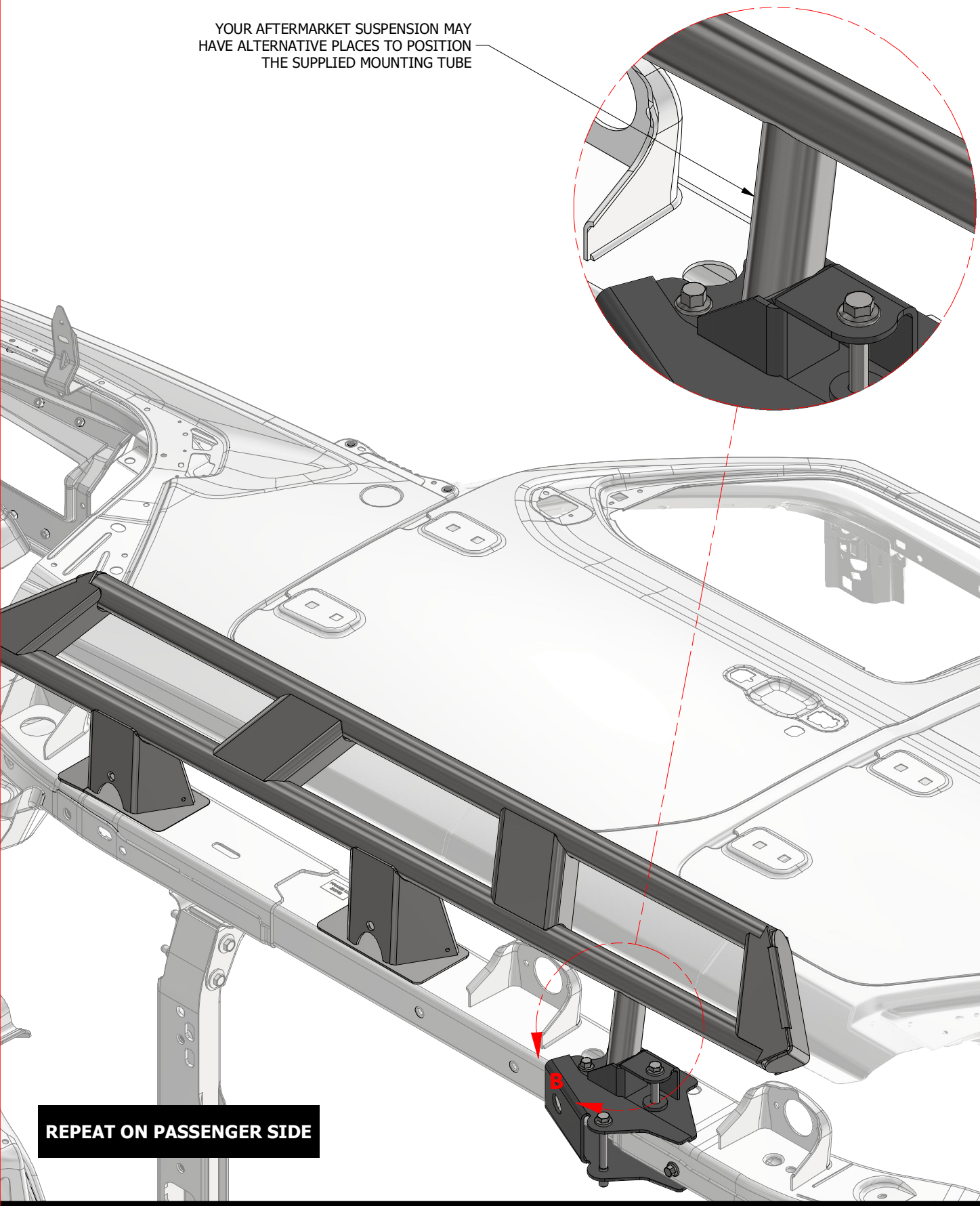

REPEAT ON PASSENGER SIDE