MB1259 - Assembly Instructions Frame Mounted Rocker Guards for Jeep JT

FRAME MOUNTED ROCKER GUARDS FOR AFTERMARKET LONG ARM SUSPENSIONS

Compatible with 2018-Present JT Gladiator

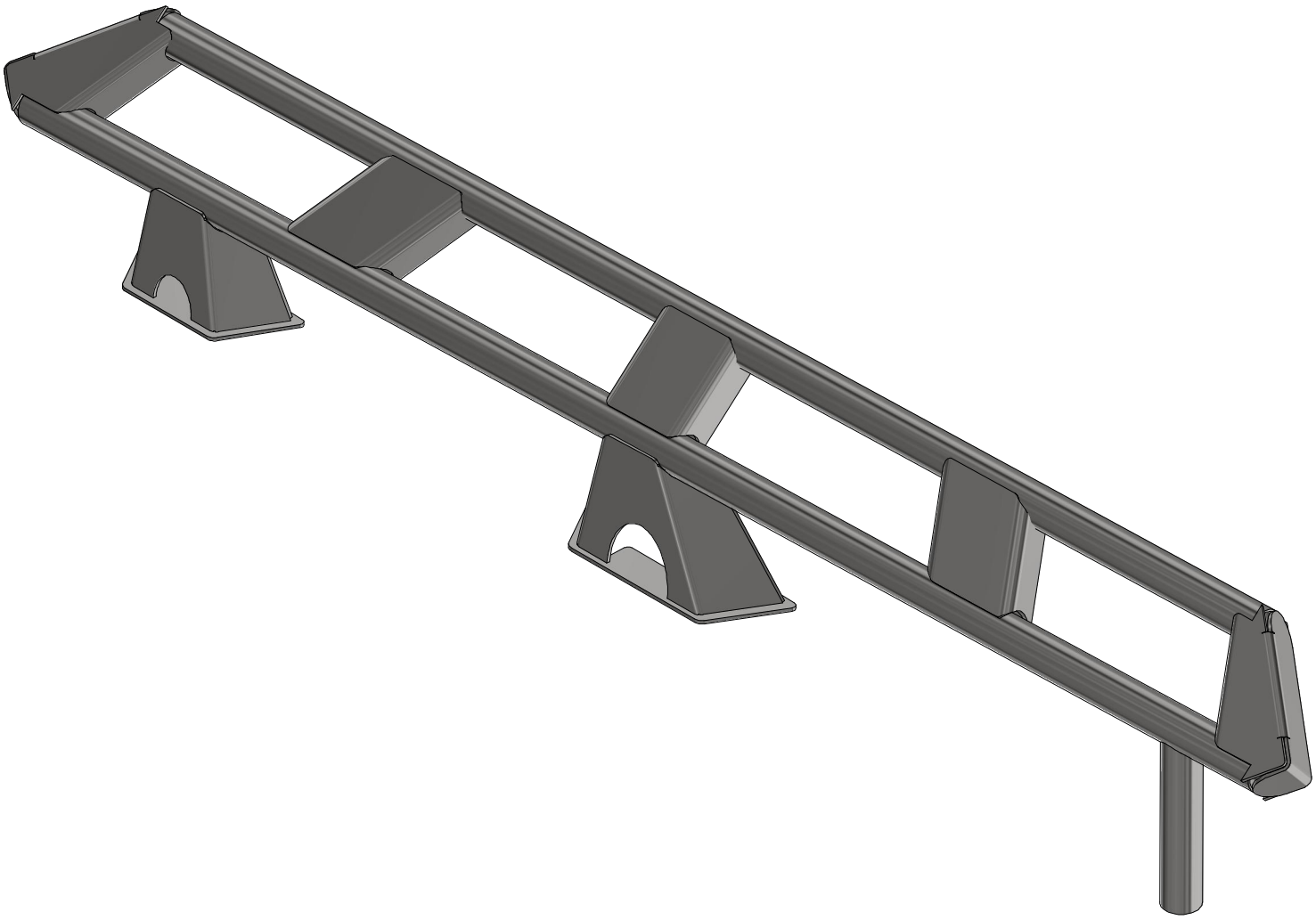

ASSEMBLY INSTRUCTIONS

MB1259 - Assembly Instructions Frame Mounted Rocker Guards for Jeep JT

CONTENTS

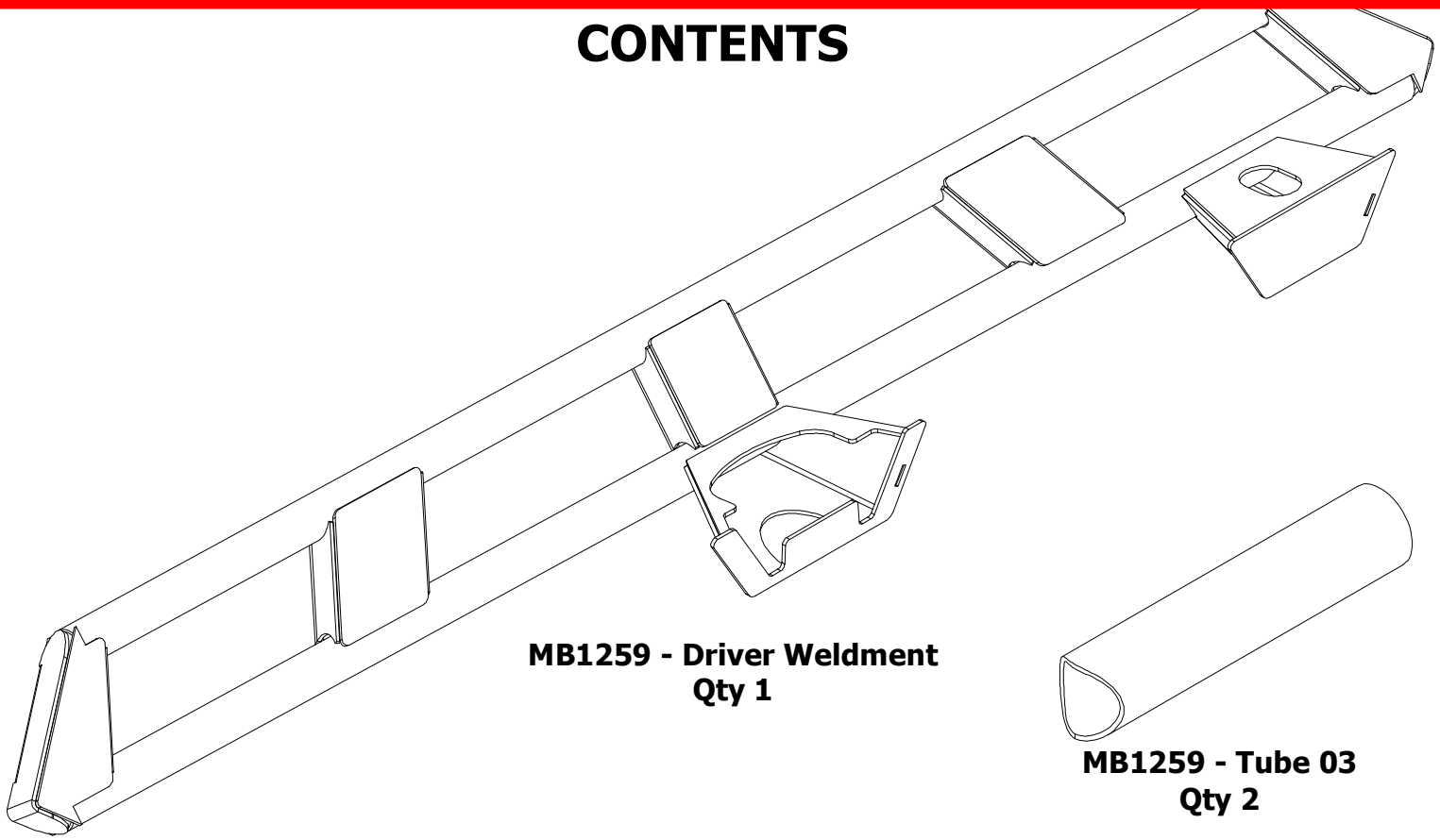

MB1259 - Driver Weldment
Qty 1

MB1259 - Tube 03
Qty 2

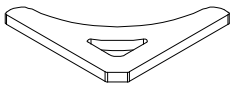

MB2098-90
Qty 8

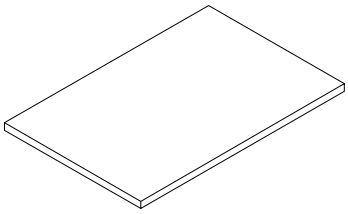

MB1259-13
Qty 2

MB1259 - Passenger Weldment
Qty 1

MB1259-250 - Assembly Instructions Frame Mounted Rocker Guards for Jeep JT

CONTENTS

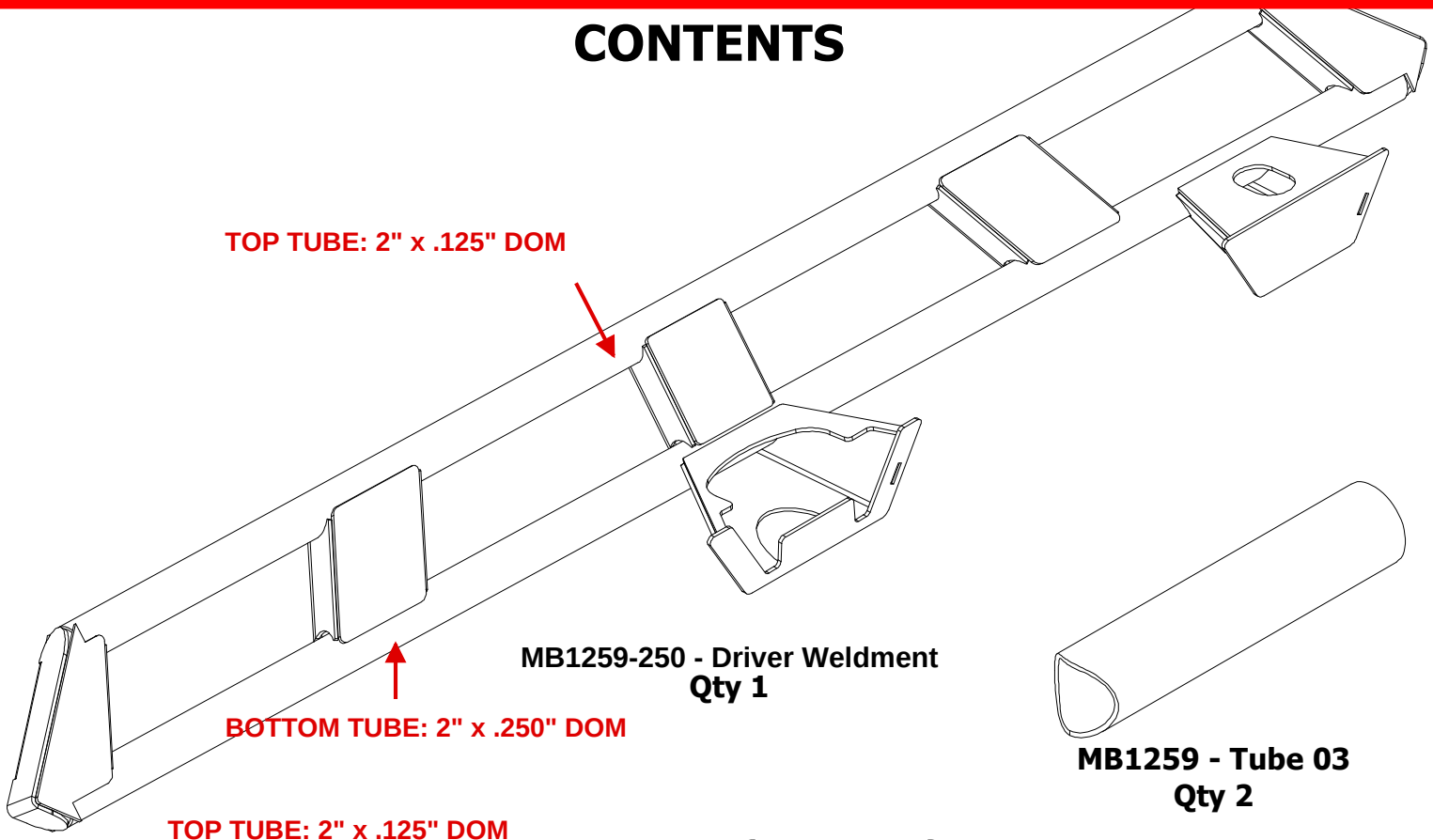

MB1259-250 - Driver Weldment
Qty 1

MB1259 - Tube 03
Qty 2

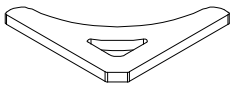

MB2098-90
Qty 8

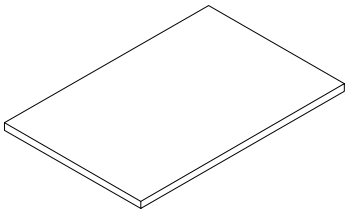

MB1259-13
Qty 2

MB1259-250 - Passenger Weldment
Qty 1

MB1259 - Assembly Instructions Frame Mounted Rocker Guards for Jeep JT

Preparation and Installation Guide

Compatibility: This product fits Jeep JT Gladiator.

1. **Disconnect Batteries:** Before starting the installation, disconnect all batteries.

2. **Install Lower Rocker Armor:** If you plan to install lower rocker armor (e.g., MB1107 for Jeep Gladiator), do this first before proceeding with the weld-on Rocker Guards.

3. **Prepare for Welding:**
   Cover or mask all painted areas, glass, mirrors, and trim.
   Ensure you have a fire extinguisher on hand.

4. **Paint or Powder Coat Parts:** Paint or powder coat all parts before installation. Note that welding will require touch-ups on painted areas.

5. **Remove Factory Paint:** Remove factory paint from the frame where welding will occur.

6. **Weld the Product:** Weld the product to the frame of the vehicle.

7. **Touch Up Paint**: After welding, touch up the frame and any affected areas with paint.

Pro Tip: Use STEEL-IT paint, which can be welded through and easily touched up afterward.

MB1259 - Assembly Instructions Frame Mounted Rocker Guards for Jeep JT

STEP 1

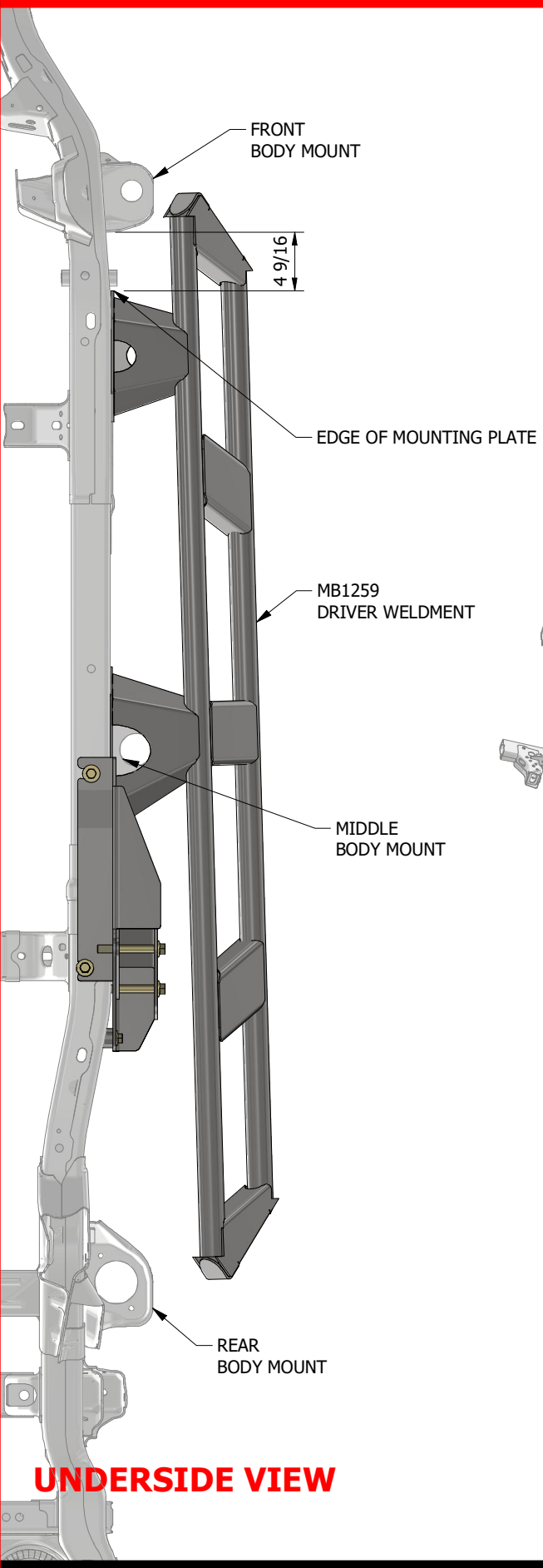

UNDERSIDE VIEW

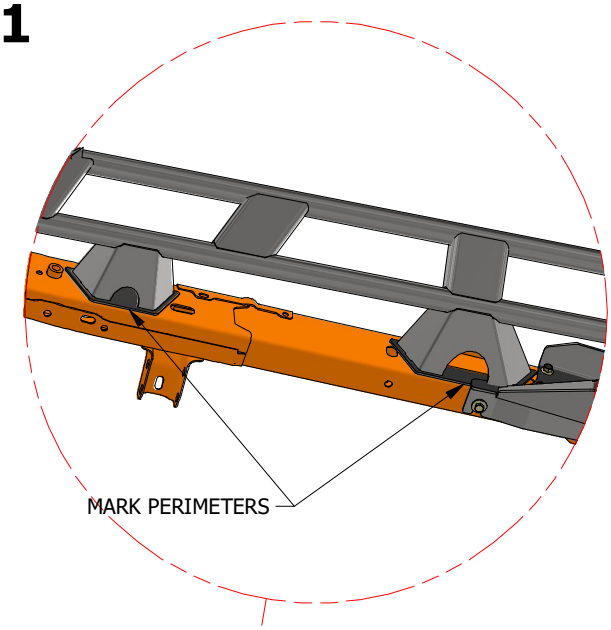

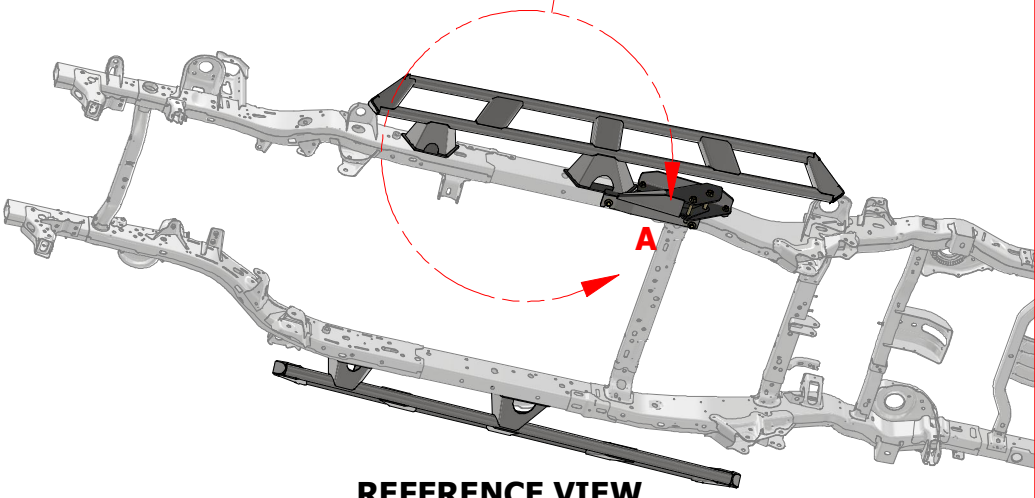

REFERENCE VIEW

1. CLAMP THE DRIVER WELDMENT TO THE FRAME IN THE POSITION AS SHOWN.
2. MARK THE PERIMETER OF THE MOUNTING PLATES.
3. UNCLAMP & REMOVE THE DRIVER WELDMENT.
4. GRIND PAINT OFF FRAME IN MARKED LOCATIONS.
5. REINSTALL & CLAMP DRIVER WELDMENT IN POSITION SHOWN.
6. TACK WELD MOUNTING PLATES TO FRAME.

REPEAT ON PASSENGER SIDE

MB1259 - Assembly Instructions Frame Mounted Rocker Guards for Jeep JT

STEP 2

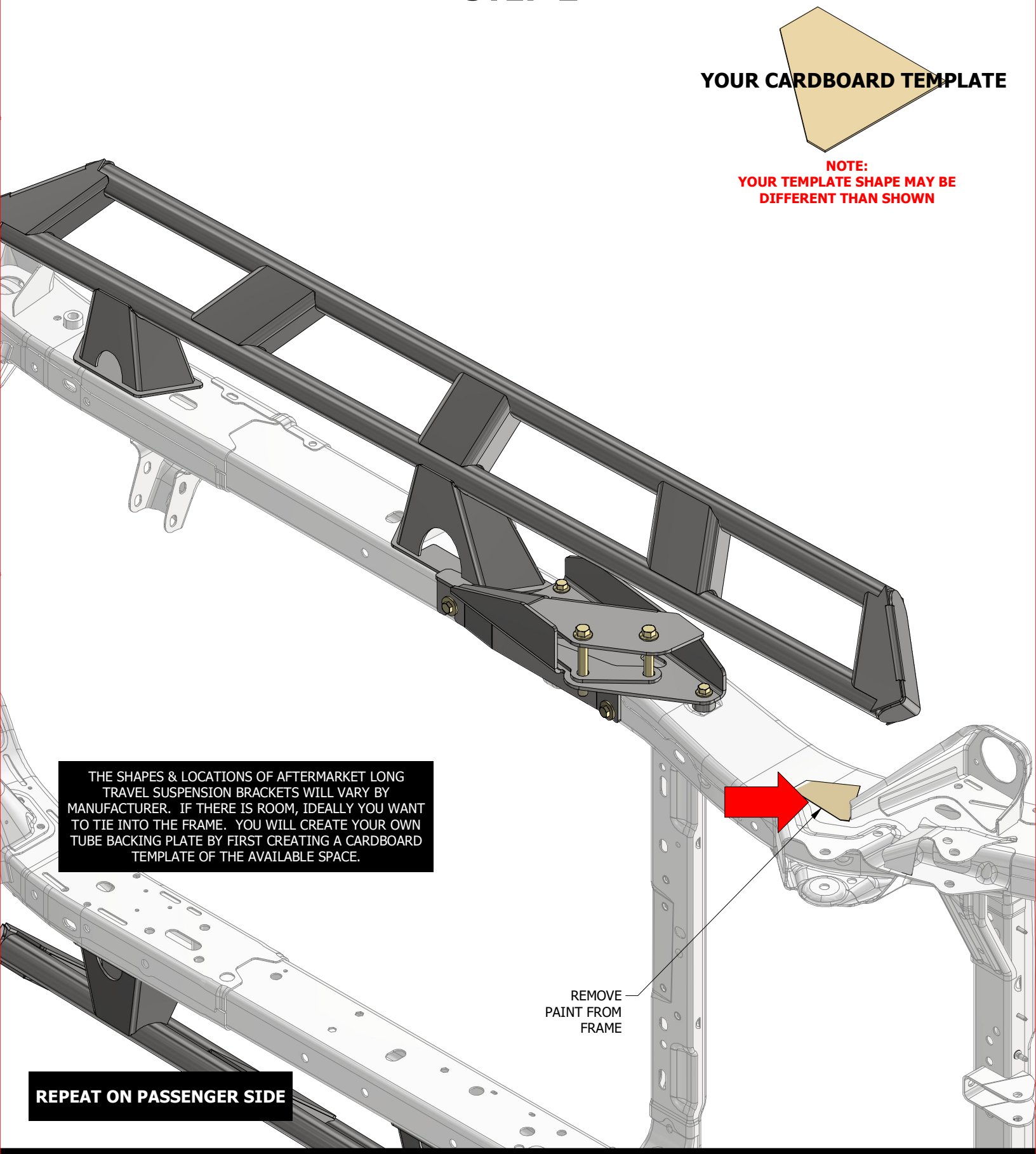

MB1259 - Assembly Instructions Frame Mounted Rocker Guards for Jeep JT

STEP 3

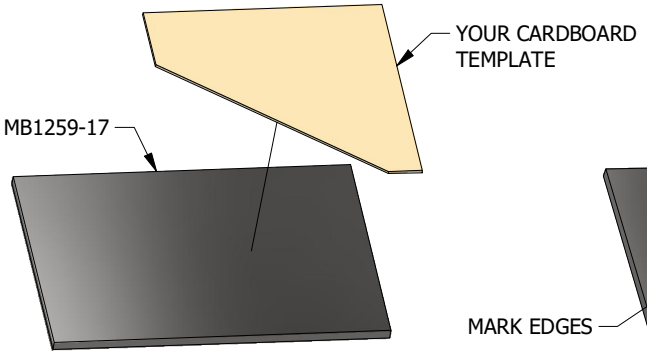

POSITION

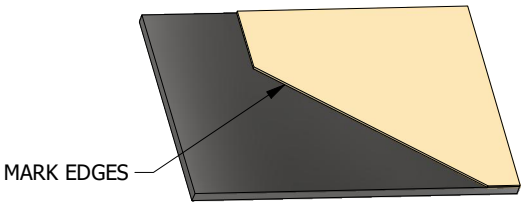

MARK

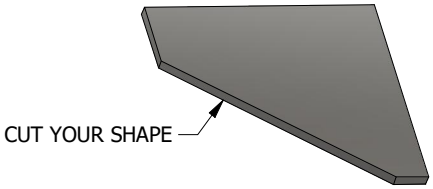

CUT

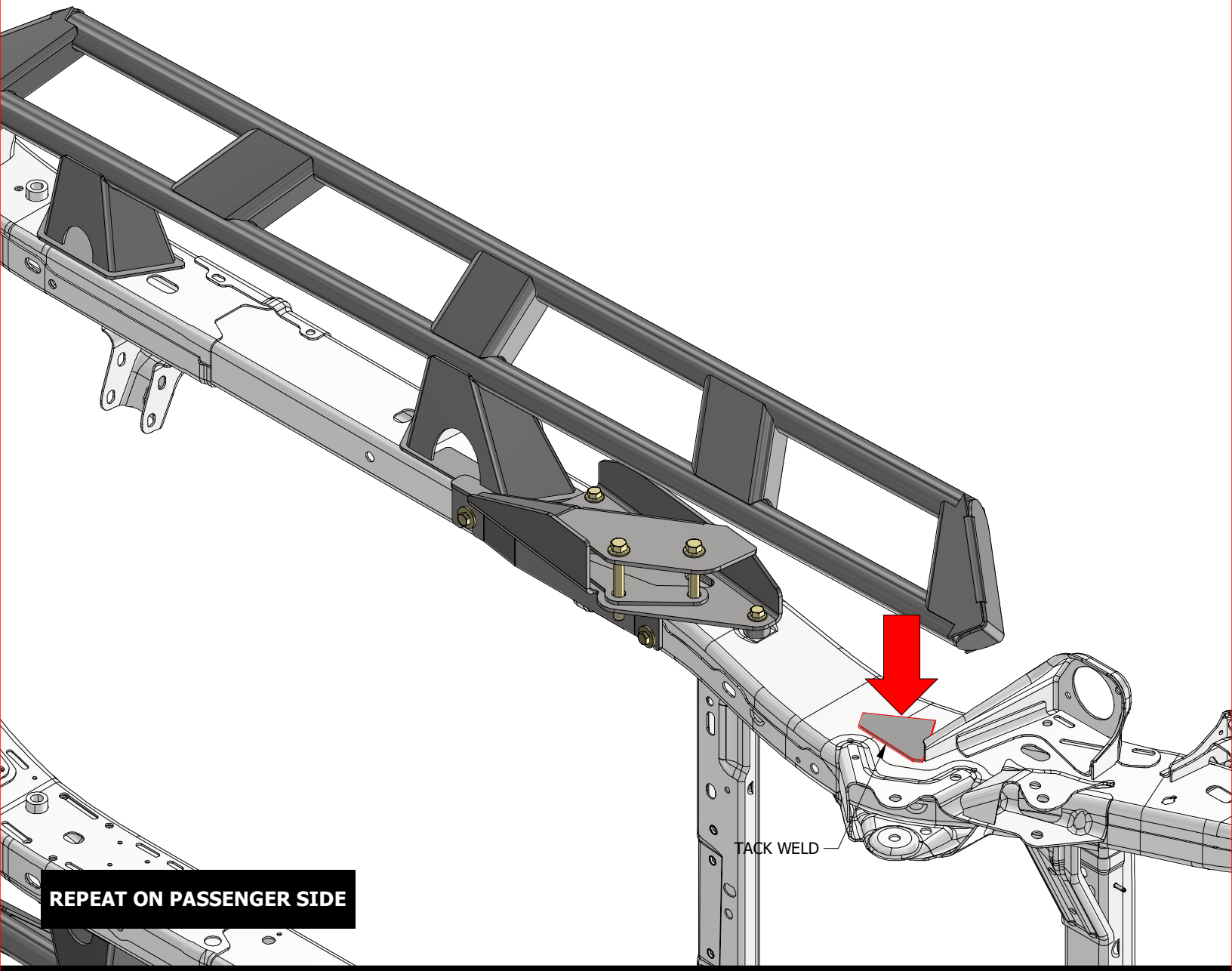

REPEAT ON PASSENGER SIDE

MB1259 - Assembly Instructions Frame Mounted Rocker Guards for Jeep JT

STEP 4

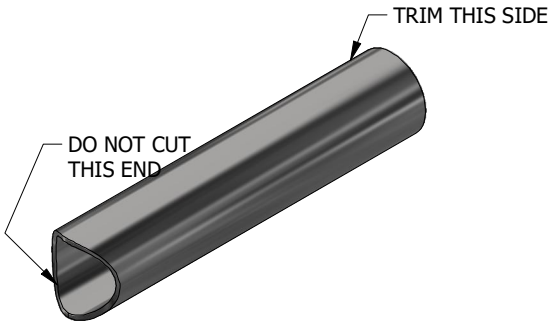

MB1259-TUBE 03
BEFORE YOUR CUSTOM TRIMMING



MB1259-TUBE 03
AFTER YOUR CUSTOM TRIMMING

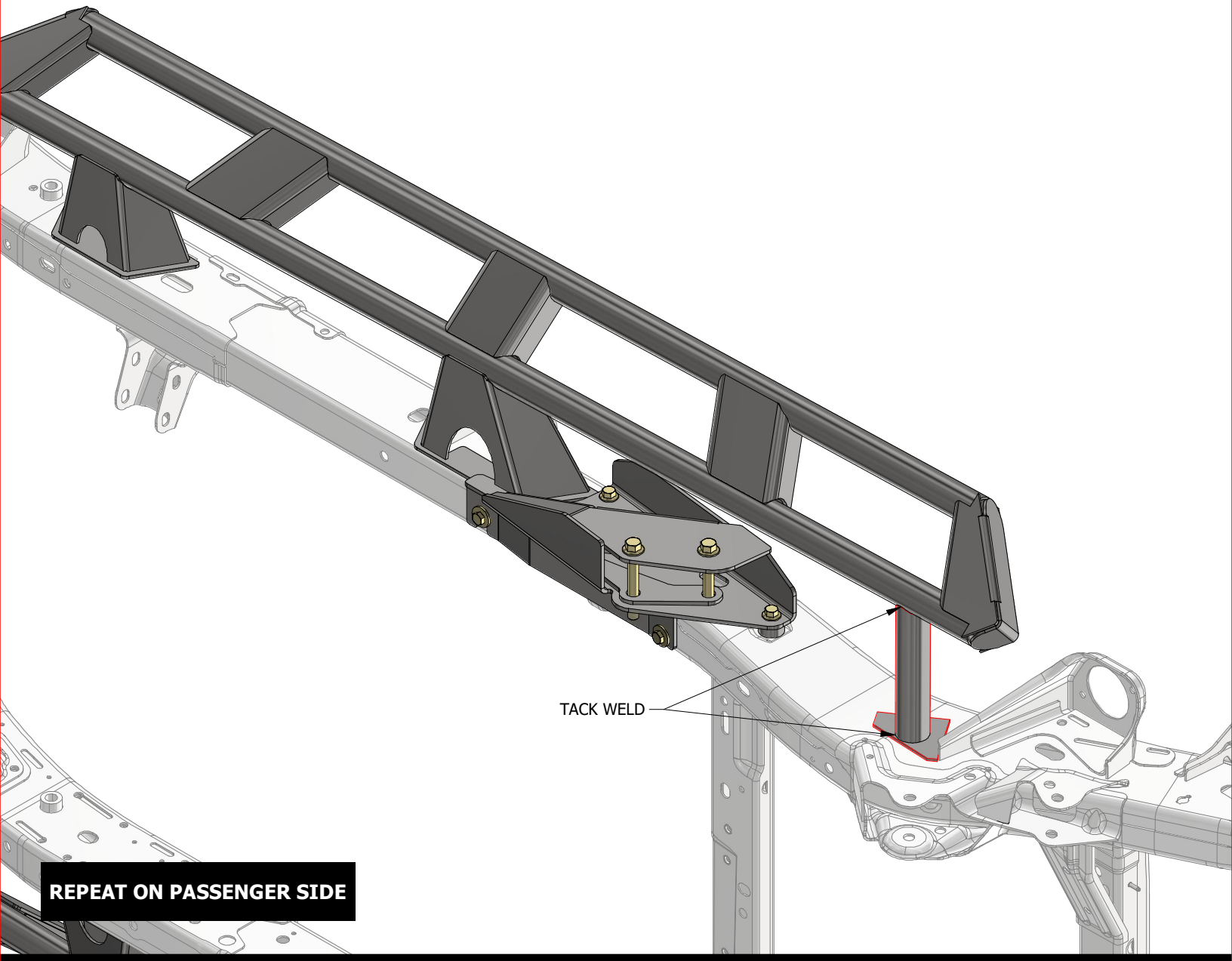

REPEAT ON PASSENGER SIDE

MB1259 - Assembly Instructions Frame Mounted Rocker Guards for Jeep JT

STEP 5

ONCE ALL PARTS ARE INSTALLED & TACK WELDED, FULLY WELD THE PERIMETERS OF THE MOUNTING PLATES AND TUBES YOU INSTALLED.

TOUCH UP ALL PAINT WHERE NEEDED.

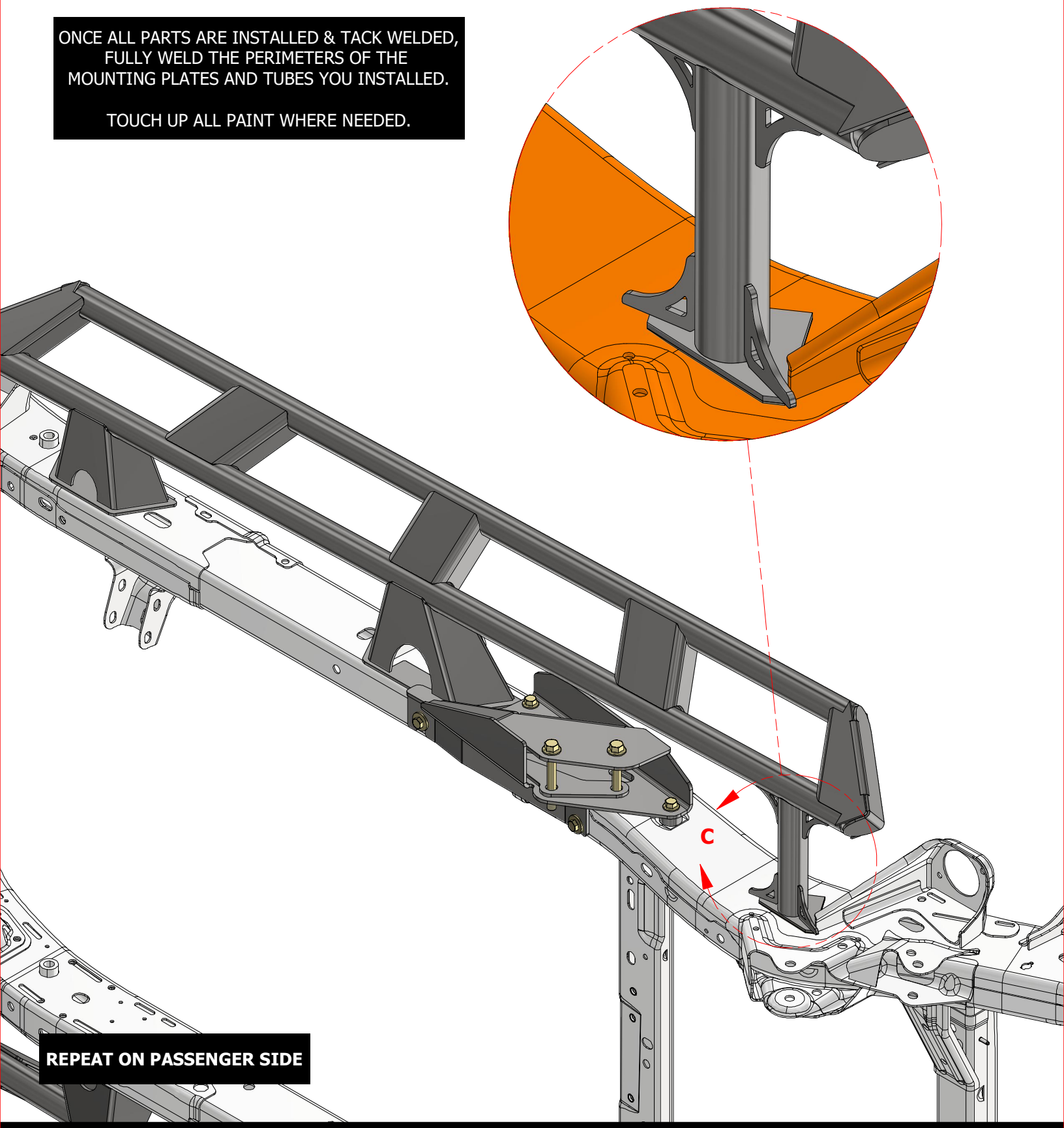

REPEAT ON PASSENGER SIDE