MB2187 / MB2196 - Assembly Instructions

Cowl Ditch Light Bracket

Compatible with 2018+ Jeep JL / JLU / JT



ASSEMBLY INSTRUCTIONS

MB2196

CONTENTS

Fits Jeep JL / JLU / JT

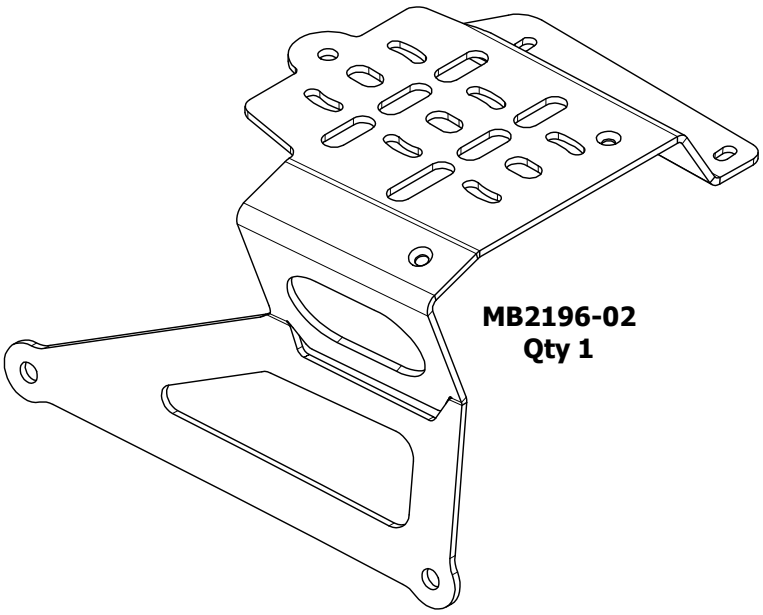

MB2196-02
Qty 1

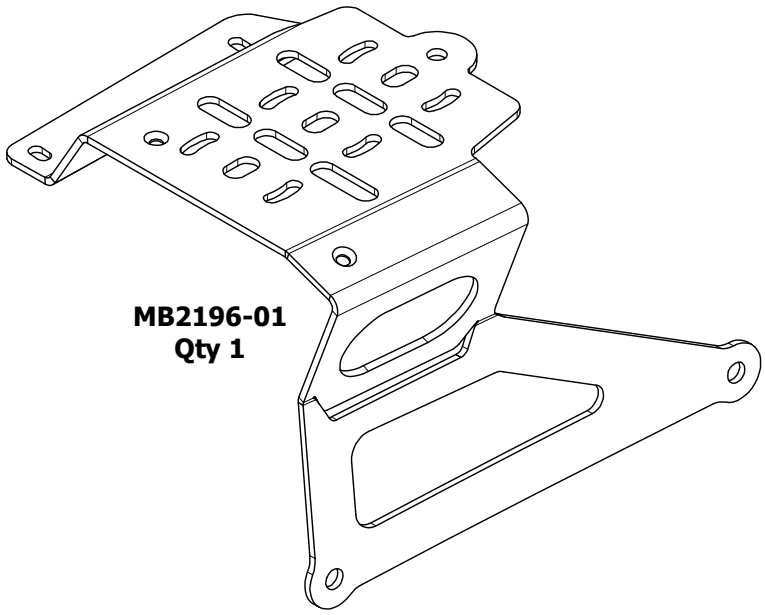

MB2196-01
Qty 1

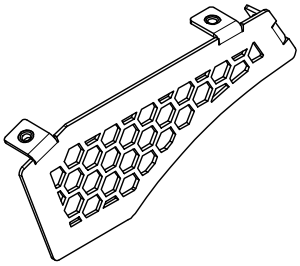

MB2196-04
Qty 1

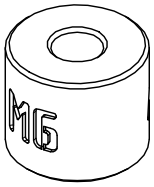

MB2186-11
Qty 4



MB2186-12
Qty 4

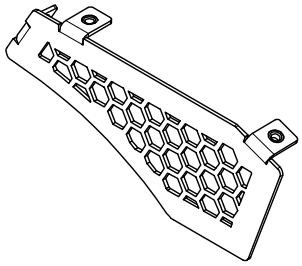

MB2196-03
Qty 1

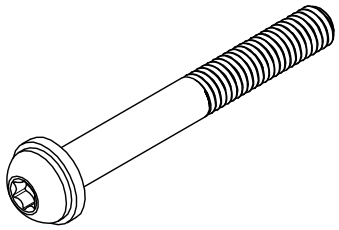

SEMS M6-1.0 x 50
Qty 4

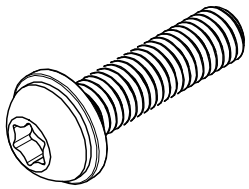

SEMS M8-1.25 x 30
Qty 4

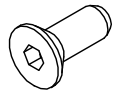

#10-24 x 1/2" FHS-SS
Qty 6

MB2187

CONTENTS

Fits Jeep 392 / Mojave

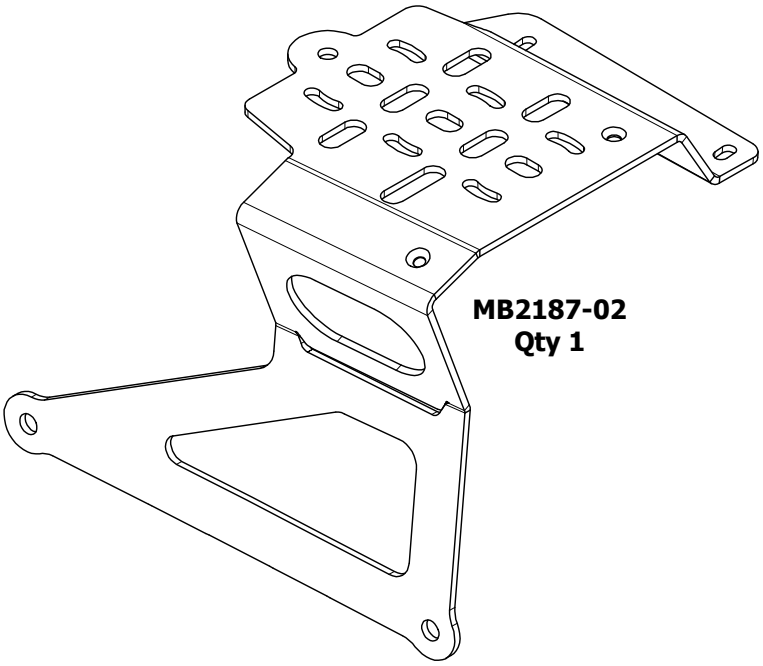

MB2187-02
Qty 1

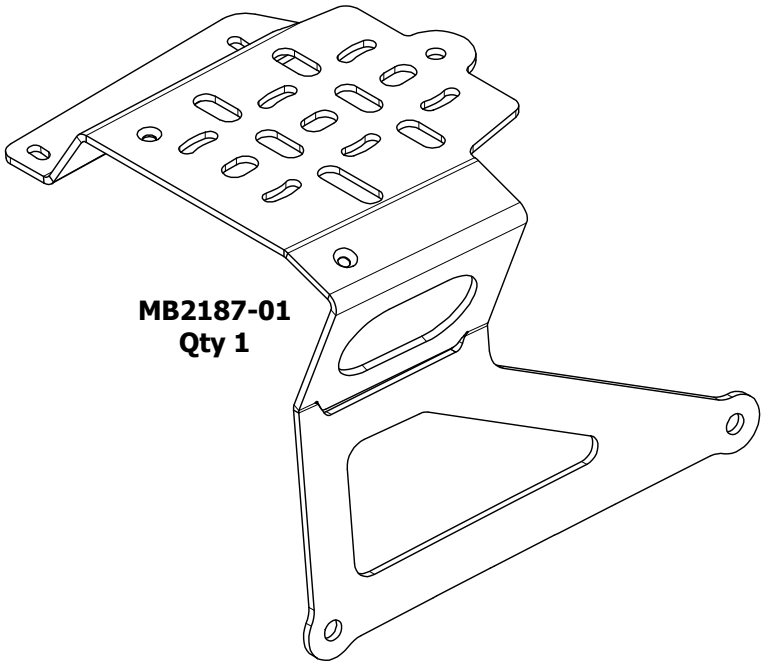

MB2187-01
Qty 1

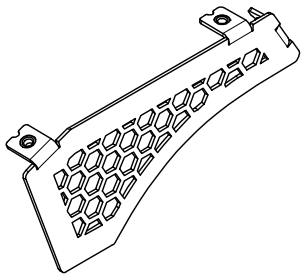

MB2187-04
Qty 1

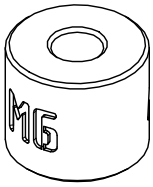

MB2186-11
Qty 4



MB2186-12
Qty 4

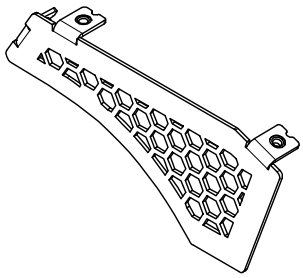

MB2186-03
Qty 1

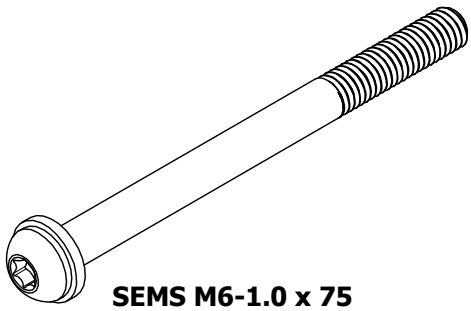

SEMS M6-1.0 x 75
Qty 4

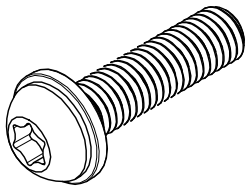

SEMS M8-1.25 x 30
Qty 4

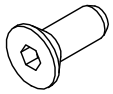

#10-24 x 1/2" FHS-SS
Qty 6

Preparation and Installation Guide

Compatibility: These instructions cover both Motobilt Cowl Ditch Light Bracket kits. The MB2187 fits 2018-current Jeep JL, JLU, and JT models. The MB2196 fits Jeep Wrangler 392 and Gladiator Mojave models.

1. **Light Installation:** Install the auxiliary lights onto the brackets before final installation when possible. Light mounting hardware is supplied by the light manufacturer.

2. **Light Adjustment:** Leave the light mounting hardware slightly loose until the brackets are installed. Aim the lights to the desired position, then fully tighten the mounting hardware.

3. **Wiring:** Route all light wiring away from moving components, sharp edges, and high-temperature areas. Wiring and electrical connections are not included with this kit.

Pro Tip: Use STEEL-IT paint, which can be welded through and easily touched up afterward.

Note: Motobilt, Inc. products are intended for **OFF-ROAD USE ONLY**. See full legal disclaimer at the end of these instructions.

MB2187 / MB2196 - Assembly Instructions

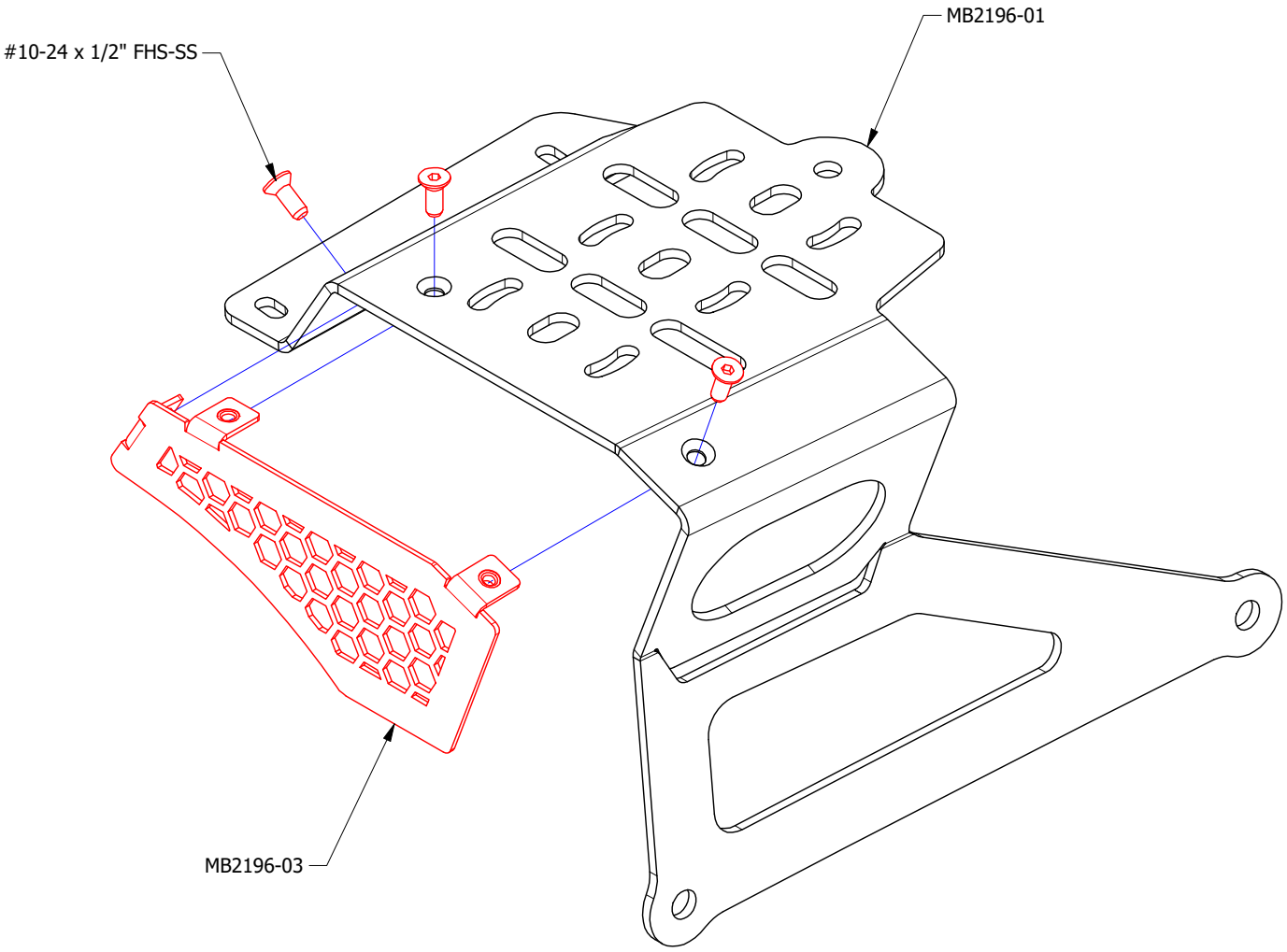

MB2187 / MB2196 - Assembly Instructions

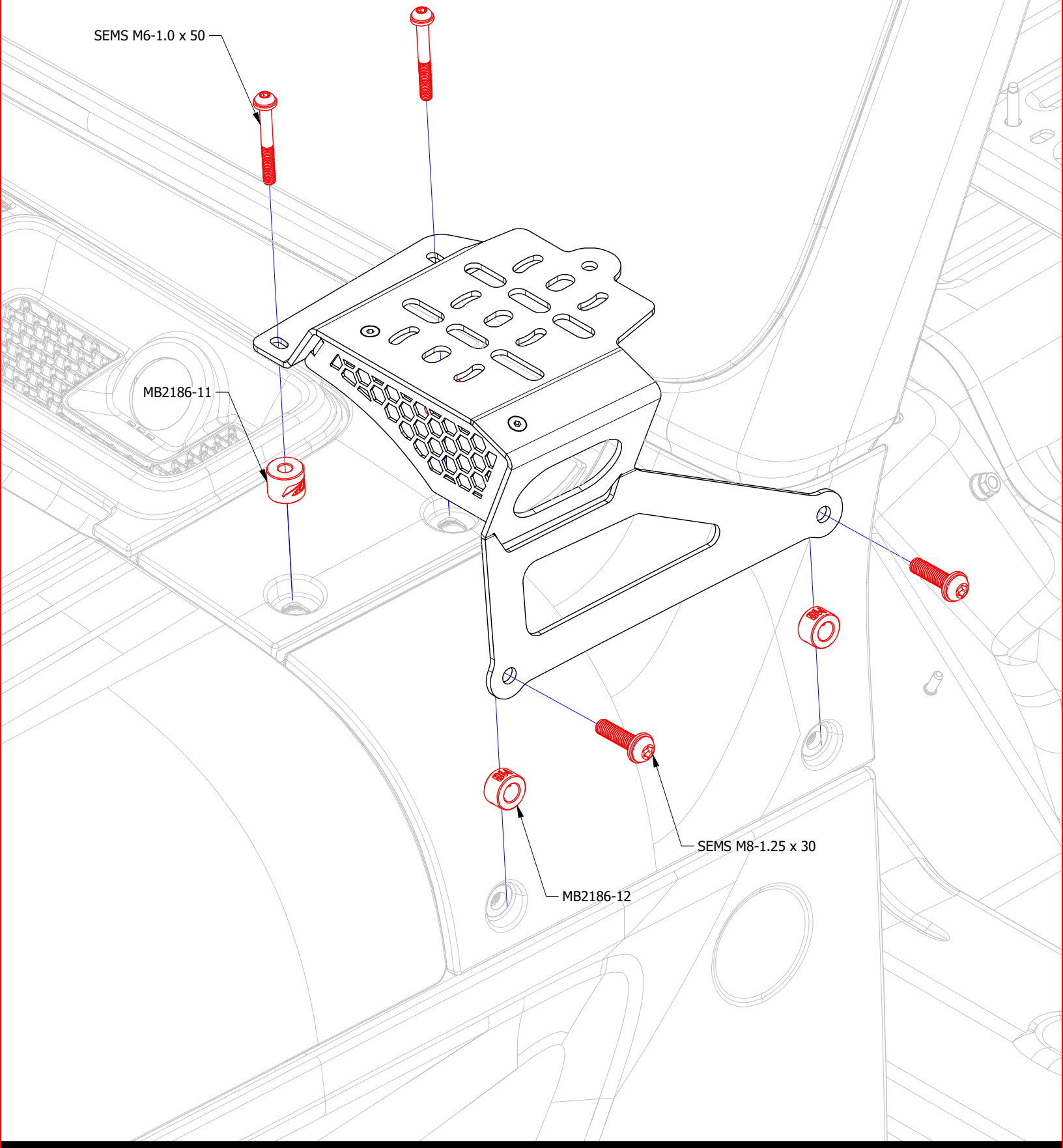

LEGAL DISCLAIMER

Motobilt, Inc. products are designed and manufactured primarily for **OFF-ROAD USE ONLY**. They are not certified or approved for street or highway use and may not comply with vehicle safety standards or regulations. Vehicle modifications, including the installation of Motobilt, Inc. products, may alter the handling, performance, and durability of a vehicle.

By purchasing, installing, or using any Motobilt, Inc. product, the purchaser and installer expressly acknowledge and agree to the following terms:

1. ASSUMPTION OF RISK
The purchaser and installer understand and accept that the installation and use of aftermarket products involve inherent risks, including but not limited to vehicle damage, property damage, serious injury, or death. All such risks are voluntarily assumed.

2. NO WARRANTY OF SAFETY
Motobilt, Inc. makes no representations, warranties, or guarantees, express or implied, regarding the safety, performance, or structural integrity of its products. Motobilt, Inc. products are not intended to prevent injury or death in the event of an accident, rollover, or collision.

3. INSTALLATION RESPONSIBILITY
Some Motobilt products require advanced fabrication, cutting, or welding skills. Others may require specialized tools or mechanical knowledge. Motobilt, Inc. is not responsible for improper installation, modification, or misuse of its products. Professional installation by a qualified individual is strongly recommended.

4. COMPLIANCE WITH LAWS AND REGULATIONS
The purchaser and installer are solely responsible for ensuring that the vehicle and installed products comply with all applicable local, state, and federal laws and safety regulations. Vehicle modifications may void factory warranties and may render the vehicle illegal for use on public roads.

5. MAINTENANCE AND INSPECTION
All products should be inspected regularly for signs of wear, fatigue, or damage. Continued use of damaged or improperly installed equipment increases the risk of failure and potential injury. The responsibility for inspection and maintenance rests solely with the owner and operator.

6. WARRANTY DISCLAIMER
Unless expressly stated in a written limited warranty issued by Motobilt, Inc. for a specific product, all Motobilt, Inc. products are sold "as is" and without express warranties of any kind. If a written limited warranty applies, its terms are exclusive and govern the extent of Motobilt, Inc. obligations.

To the fullest extent permitted by law, Motobilt, Inc. expressly disclaims all implied warranties, including but not limited to implied warranties of merchantability, fitness for a particular purpose, and non-infringement. No oral or written statement by Motobilt, Inc., its employees, dealers, or representatives shall constitute or create any warranty, obligation, or liability beyond what is contained in official written documentation issued by Motobilt, Inc.

7. LIMITATION OF LIABILITY
To the fullest extent permitted by law, Motobilt, Inc. disclaims all liability for any direct, indirect, incidental, consequential, or punitive damages arising out of the purchase, installation, or use of its products. This includes, but is not limited to, claims for property damage, personal injury, loss of use, or loss of income.

8. USER ACKNOWLEDGMENT
By purchasing, installing, or using Motobilt, Inc. products, the purchaser and installer acknowledge that they have read, understood, and accepted the terms of this disclaimer and voluntarily assume all associated risks.