MB2246

JK/JKU Front Seat Mounts

Fits 12-18 Jeep JK/JKU

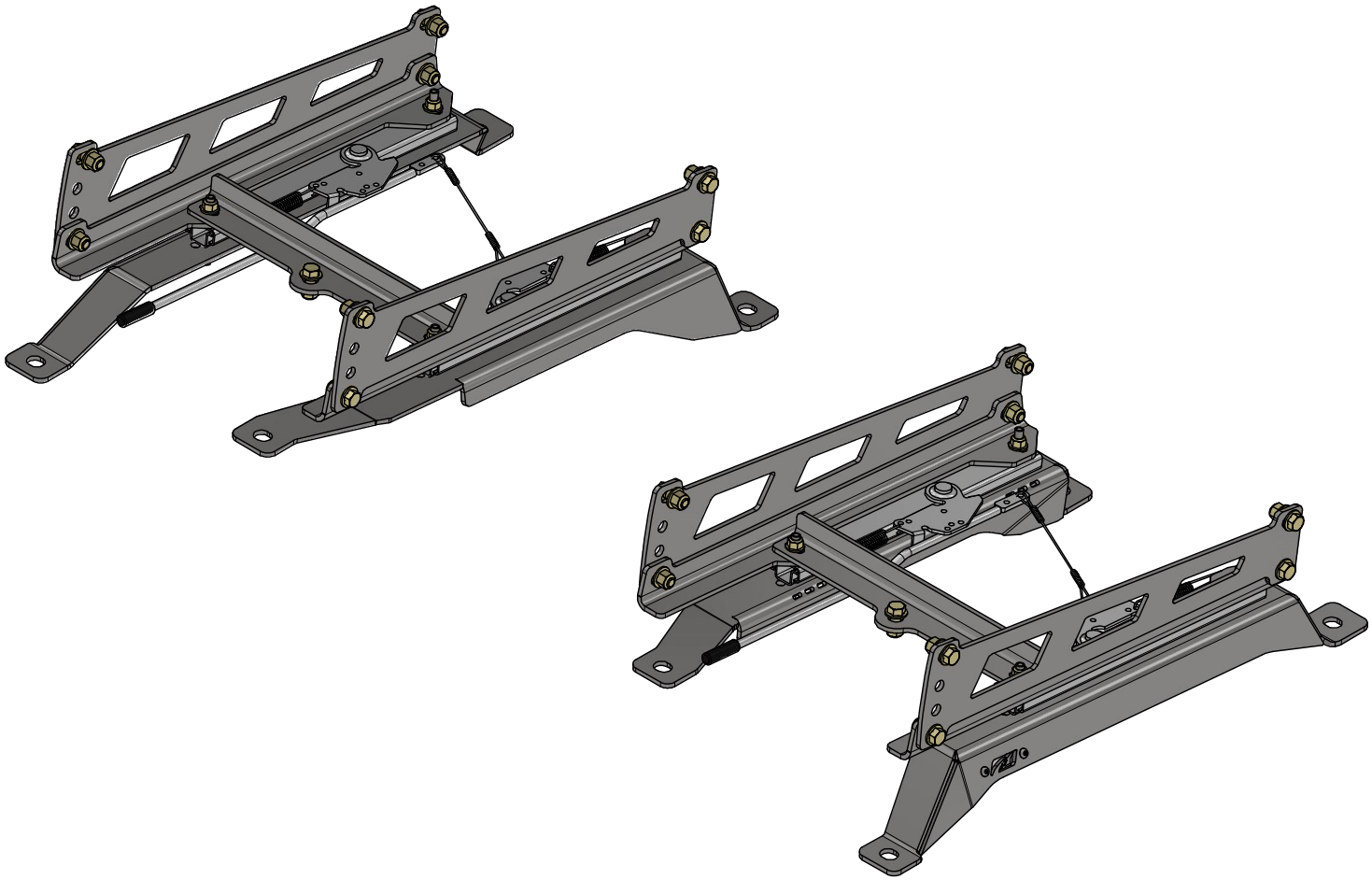

ASSEMBLY INSTRUCTIONS

MB2246

CONTENTS

DRIVER

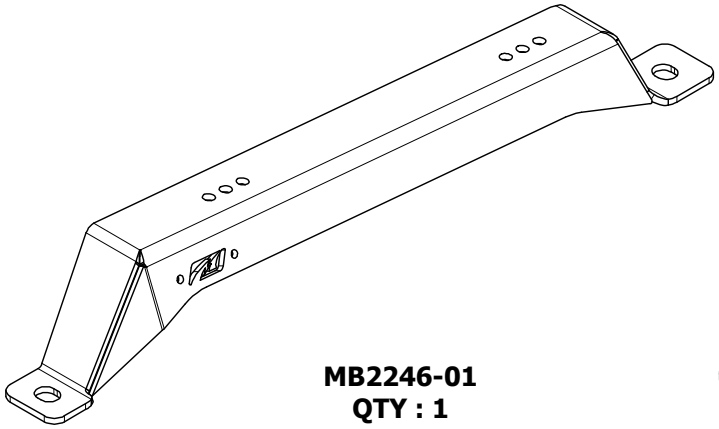

MB2246-01
QTY : 1

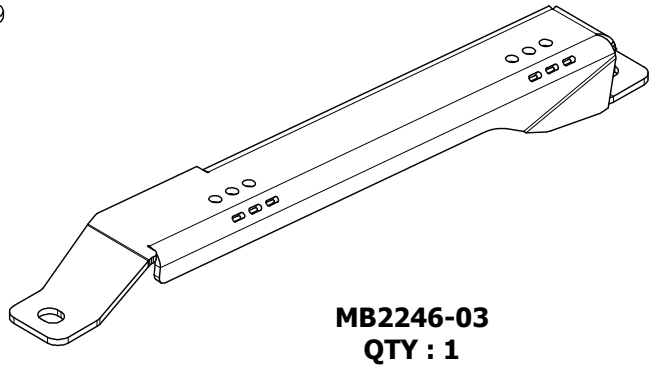

MB2246-03
QTY : 1

PASSENGER

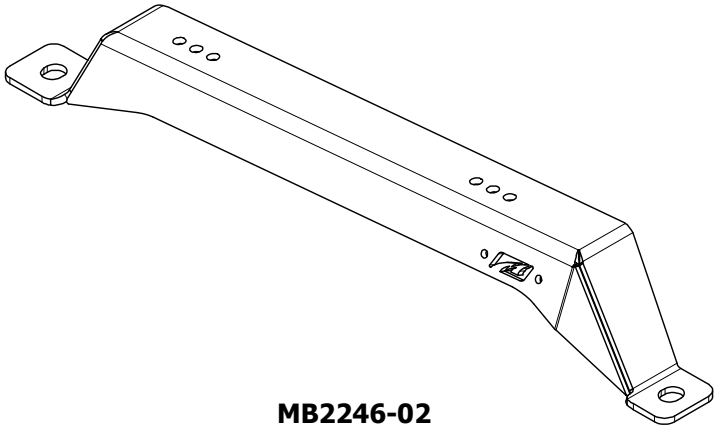

MB2246-02
QTY: 1

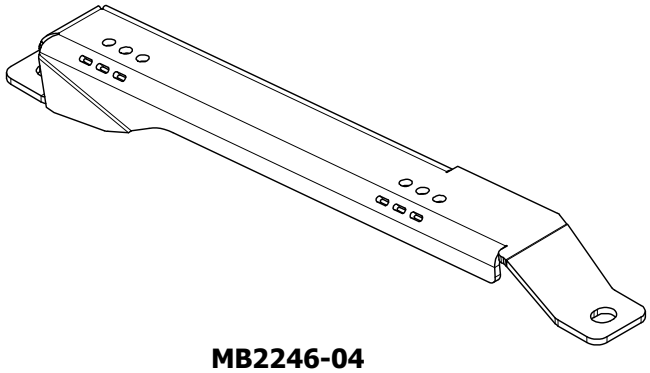

MB2246-04
QTY : 1

CONTENTS

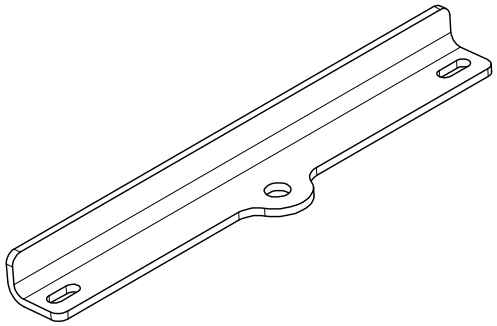

MB2250-03
Qty 2

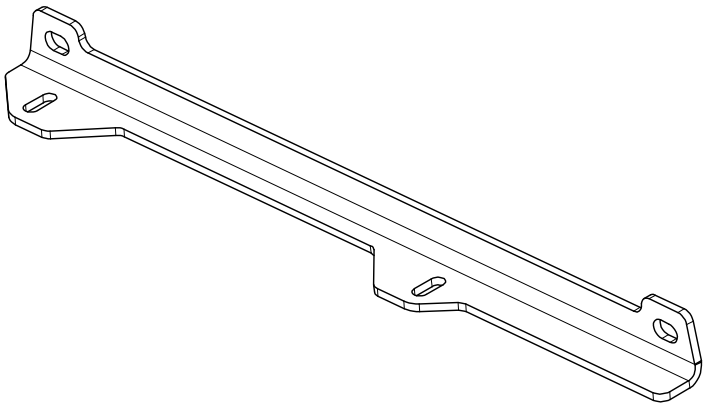

MB2250-01
Qty 2

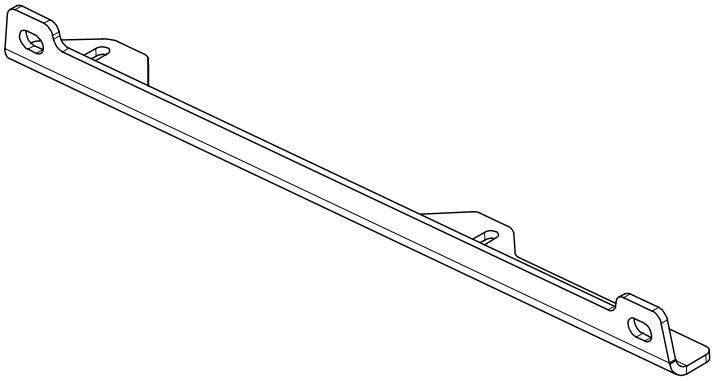

MB2250-02
Qty 2

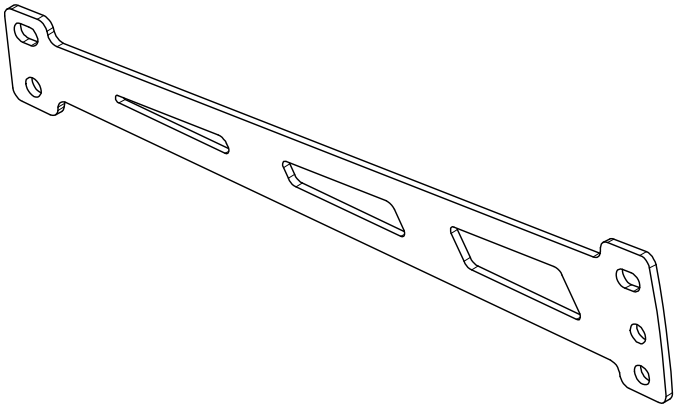

MB2246-06
Qty 4

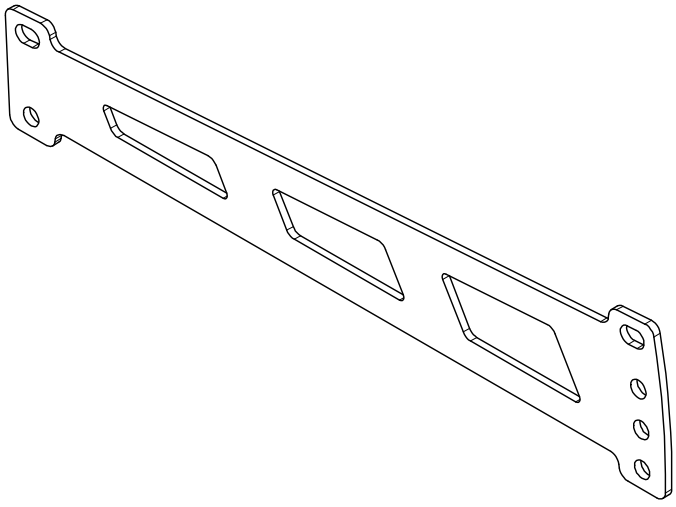

MB2250-04
Qty 4

CONTENTS

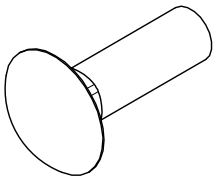

5/16-18 x 1" Carrage Bolt
Qty 8

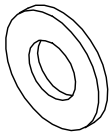

5/16" Flat Washer G8 YZ
Qty 16



5/16"-18 Nylock Nut G8 YZ
Qty 16

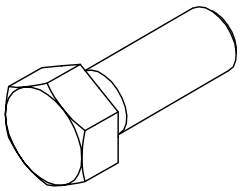

3/8-16 x 1" Hex G8 YZ
Qty 18

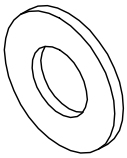

3/8" Flat Washer G8 YZ
Qty 36

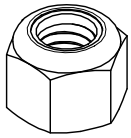

3/8"-16 Nylock Nut G8 YZ
Qty 18

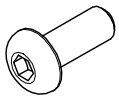

#10-24 x 1/2" BHS-SS
Qty 4

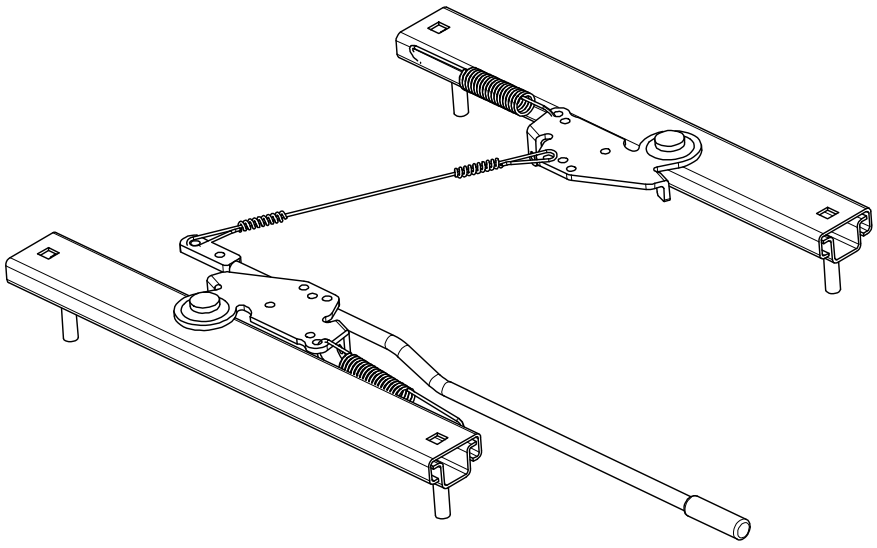

Seat mount slider base
Qty 2

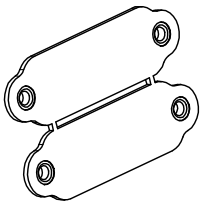

MB2246-05
Qty 1

Preparation and Installation Guide

Compatibility: These seat brackets are designed to be used when the factory seats are being replaced with aftermarket bucket seats. Do not use the seat riser brackets if you are looking for more head room.

1. **Seat Bracket Width:** These seat brackets have some width adjustment but are designed to fit most PRP Style Seats.

2. **Seat Risers:** MB2250-04 are seat risers. These are not required to use with the kit, Only if a higher seat position is desired.

3. **Accent Plate:** MB2246-05 is designed to be broken apart and painted to match either your jeep color or a accent color on your jeep.

Pro Tip: Use STEEL-IT paint, which can be welded through and easily touched up afterward.

Note: Motobilt, Inc. products are intended for **OFF-ROAD USE ONLY**. See full legal disclaimer at the end of these instructions.

MB2246

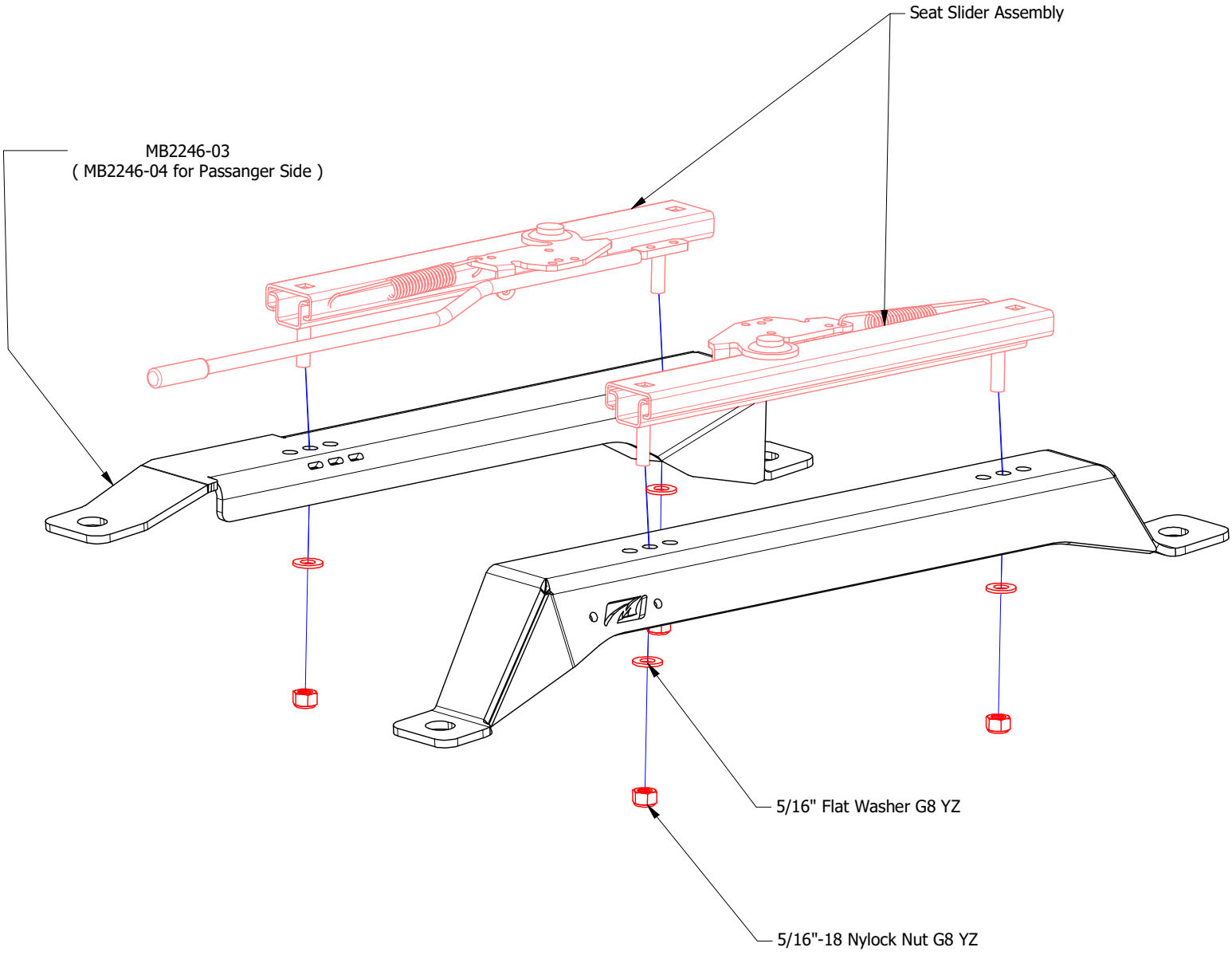
Seat Slider Assembly
MB2246-03
(MB2246-04 for Passanger Side)
5/16" Flat Washer G8 YZ
5/16"-18 Nylock Nut G8 YZ

MB2246

SEAT MOUNTING DIMENSIONS

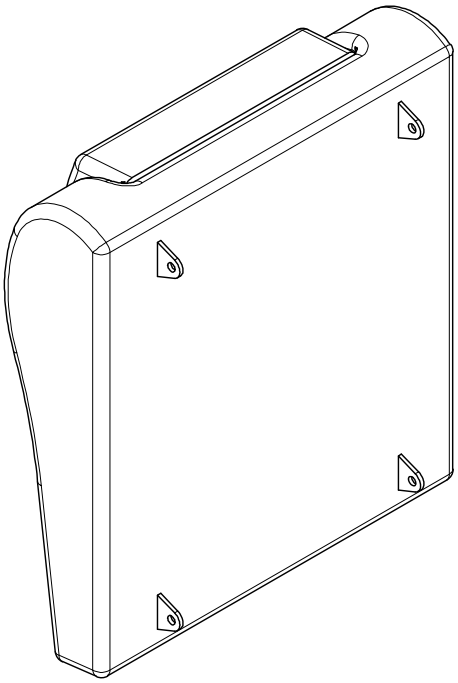

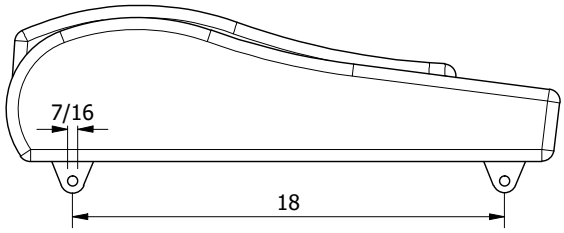

SIDE

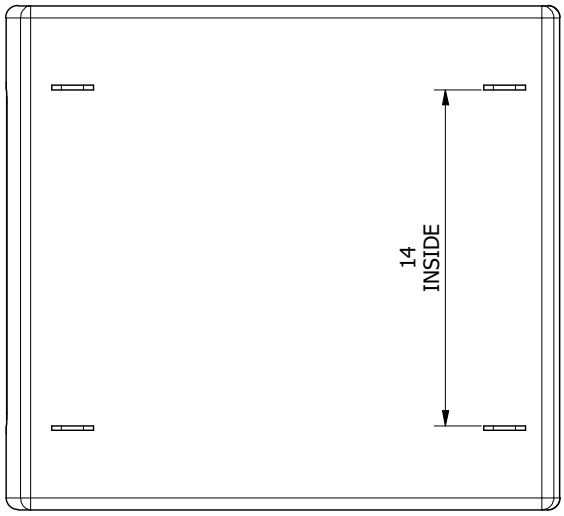

BOTTOM

MB2246

USING THE SUPPLIED FASTENERS ASSEMBLE THE LOWER SEAT BRACKETS TO THE SEAT SLIDERS. DO NOT TIGHTEN THESE ALL THE WAY UNTIL THE SEAT IS BOLTED UP AS WELL.

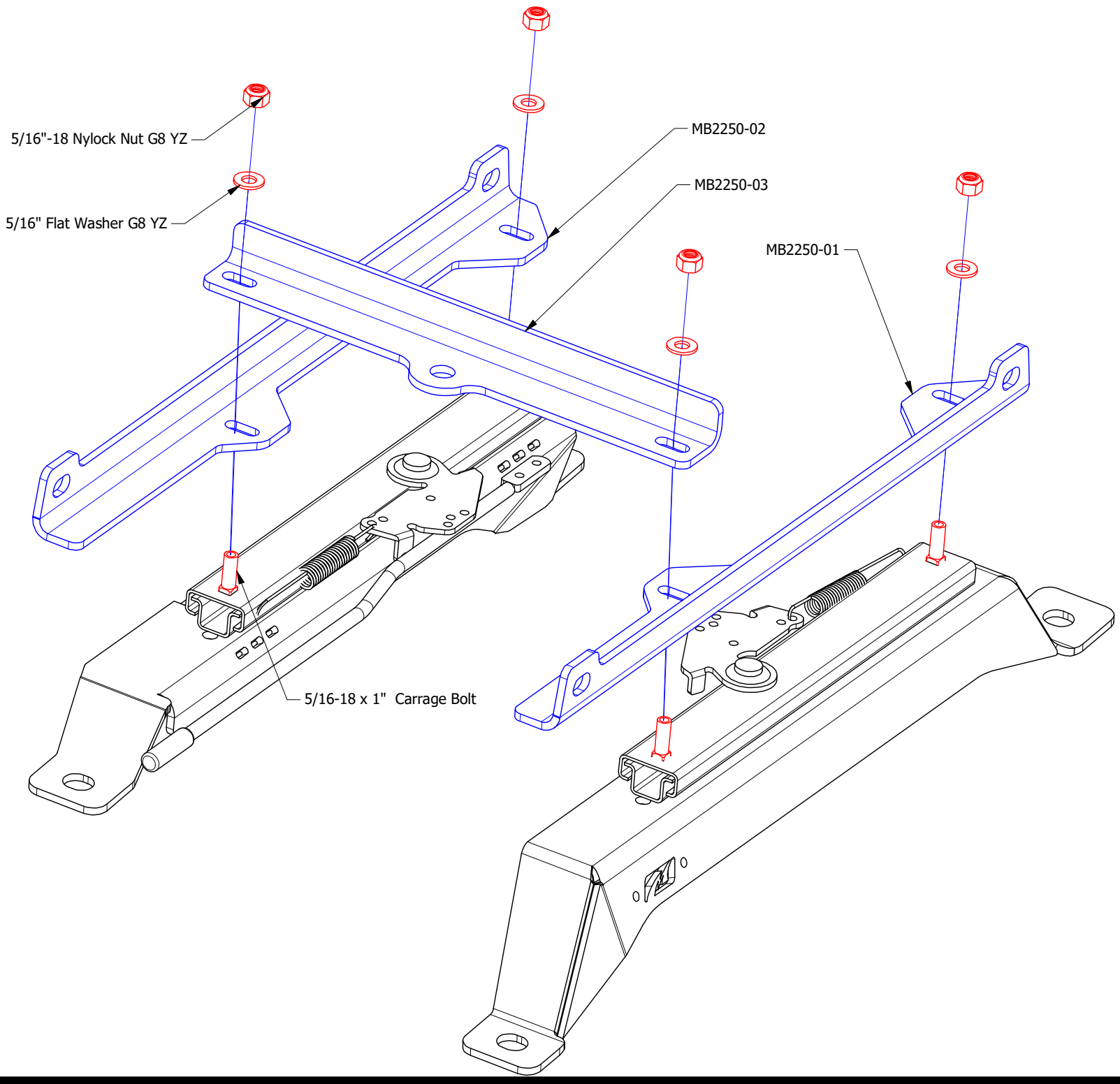

MB2246

SECURE THE NEW SEAT BRACKETS USING THE FACTORY SEAT BOLTS.

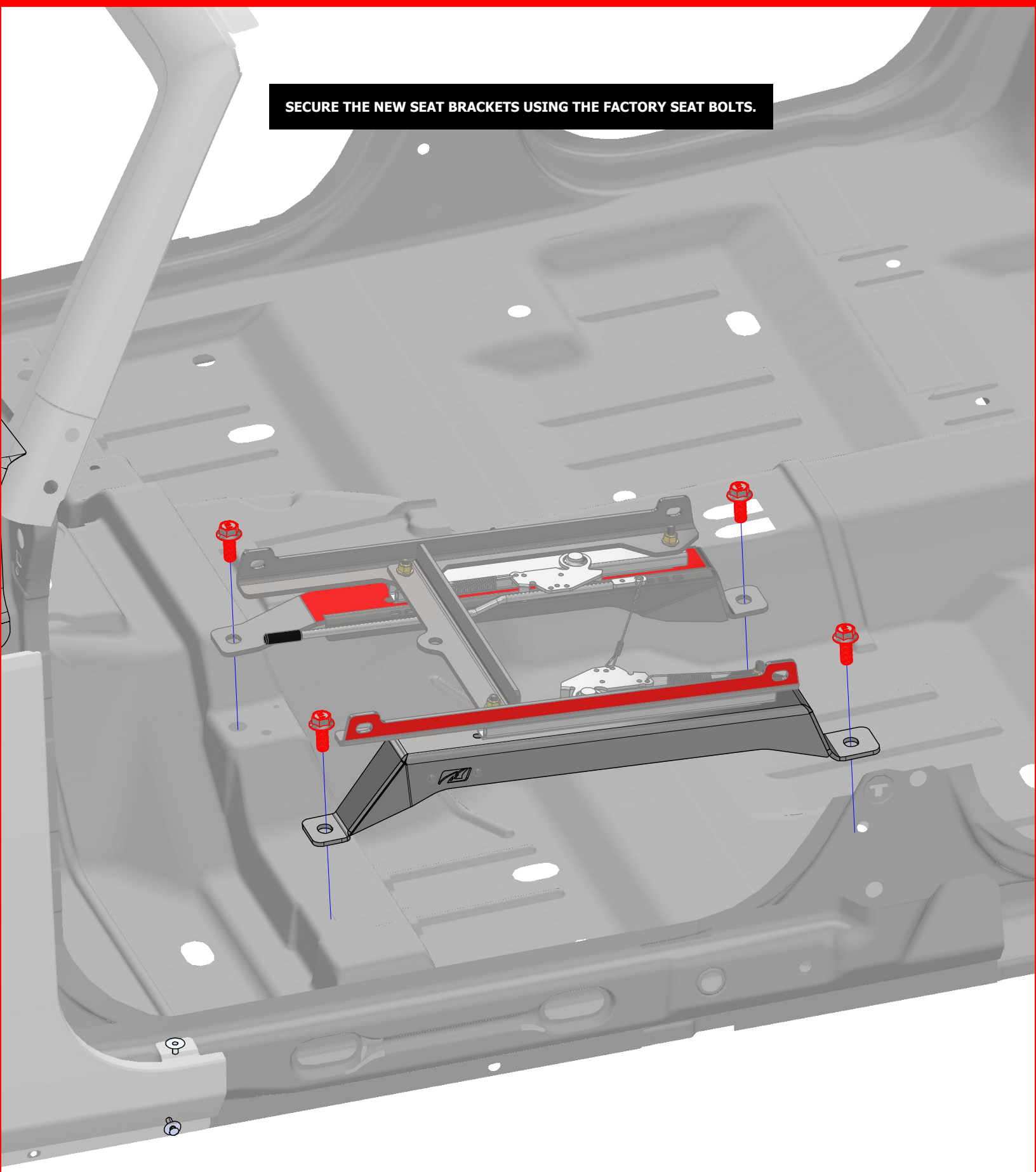

MB2246

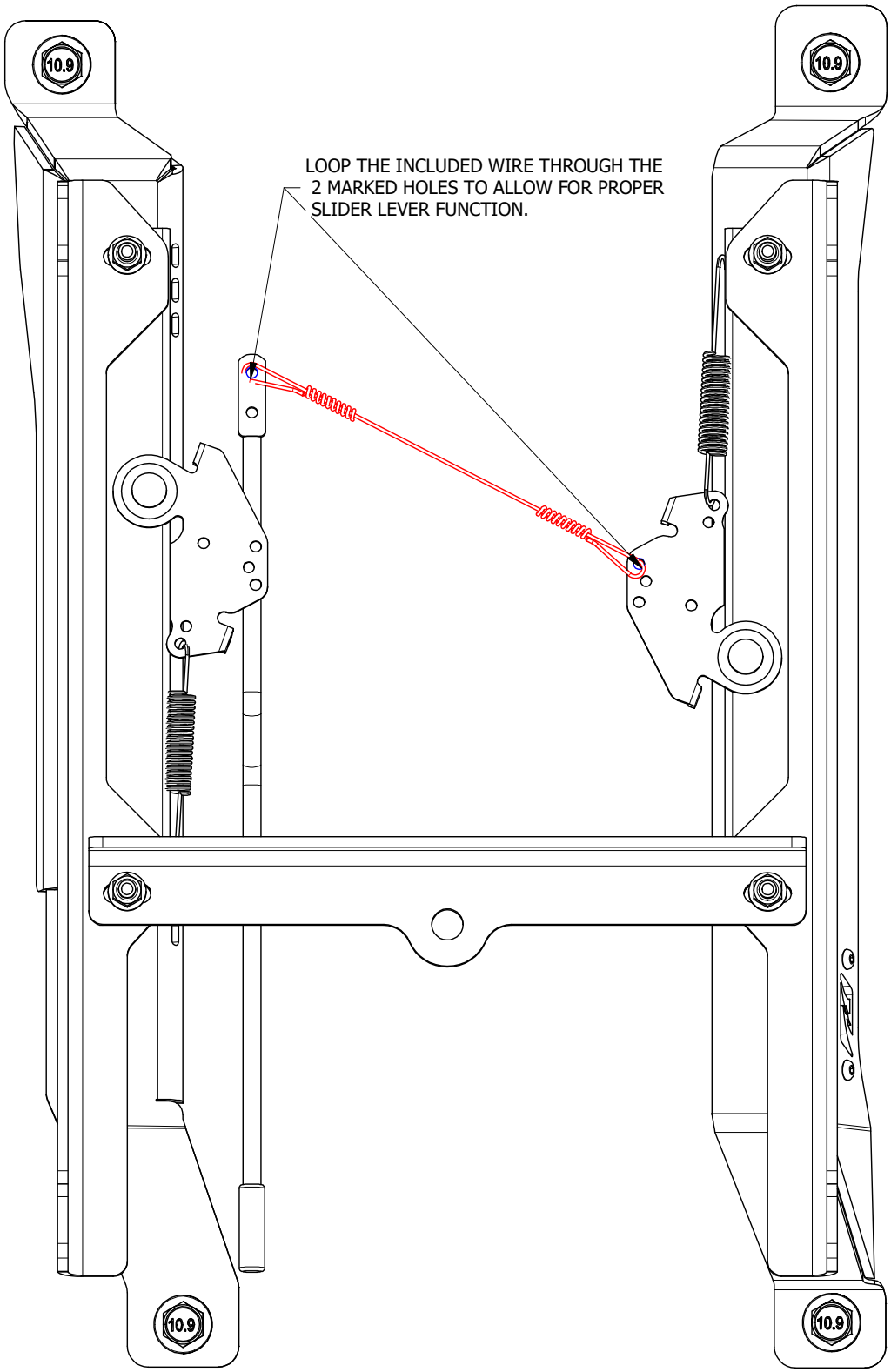
LOOP THE INCLUDED WIRE THROUGH THE
2 MARKED HOLES TO ALLOW FOR PROPER
SLIDER LEVER FUNCTION.
10.9
10.9
10.9
10.9

MB2246

MB2246-06 & MB2250-04 ARE OPTIONAL SEAT RISERS.

AFTERMARKET SEATS CAN BE MOUNTED DIRECTLY TO THE SEAT MOUNT BRACKETS MB2250-01 & MB2250-02 FOR THE LOWEST POSSIBLE SEAT HEIGHT.

MB2246-06 OFFERS APPROXIMATELY 1.25" OF RISE.

MB2250-04 OFFERS APPROXIMATELY 2" OF RISE.

BOTH MB2246-06 & MB2250-04 CAN BE CUT AND MODIFIED TO PROVIDE THE PERFECT FIT.

DO NOT TRY TO USE BOTH RISERS AT THE SAME TIME

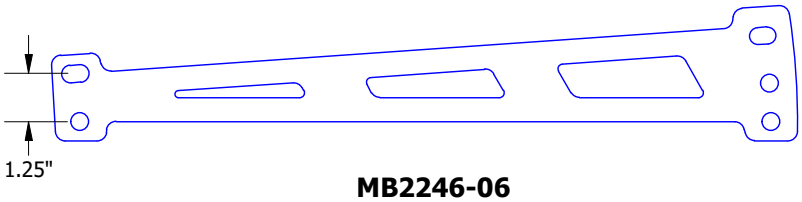

MB2246-06

OR

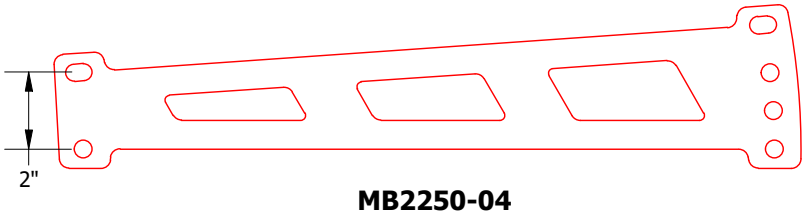

MB2250-04

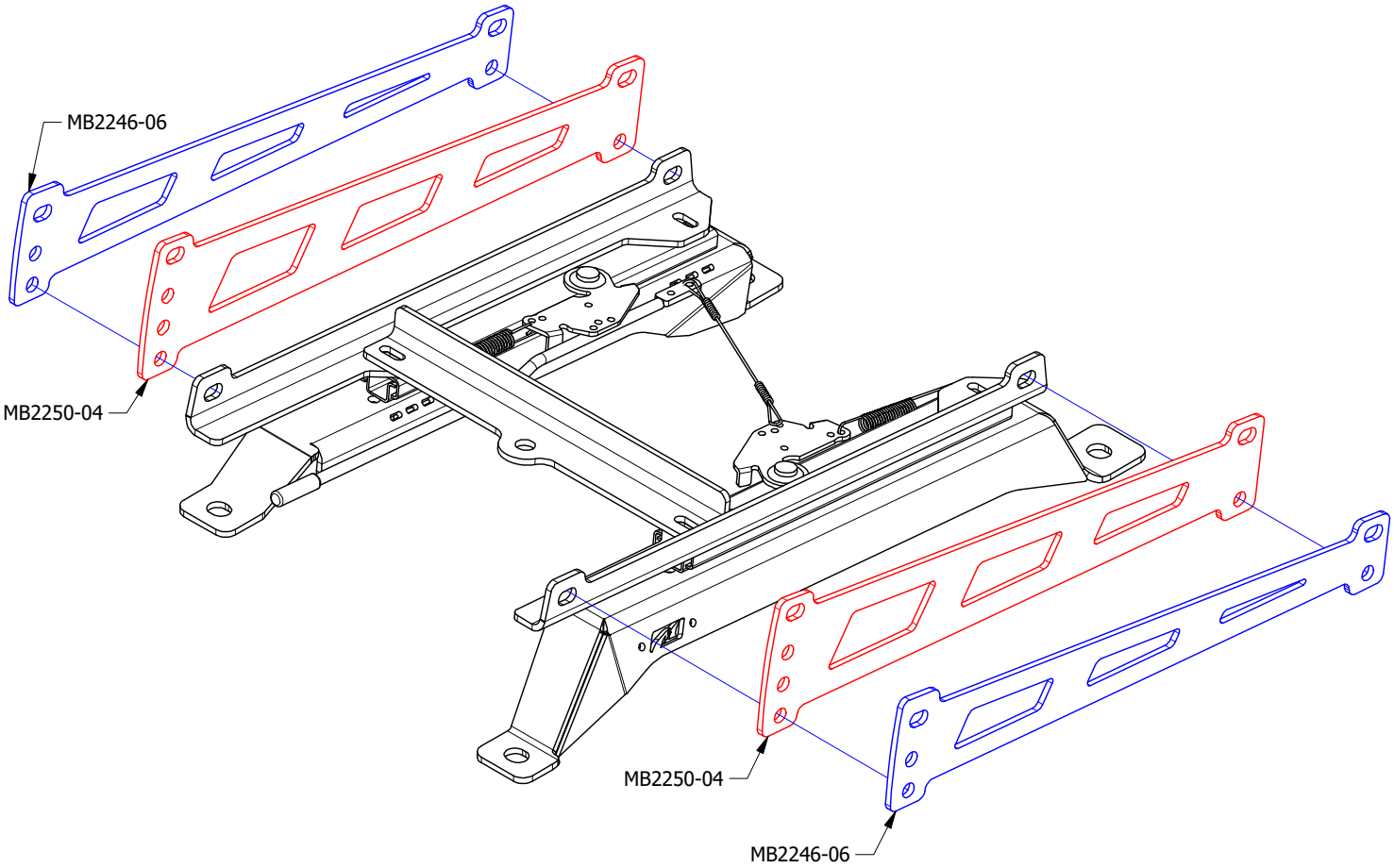

MB2246

THE MB2250-04 IS OPTIONAL SEAT RISER BRACKET.

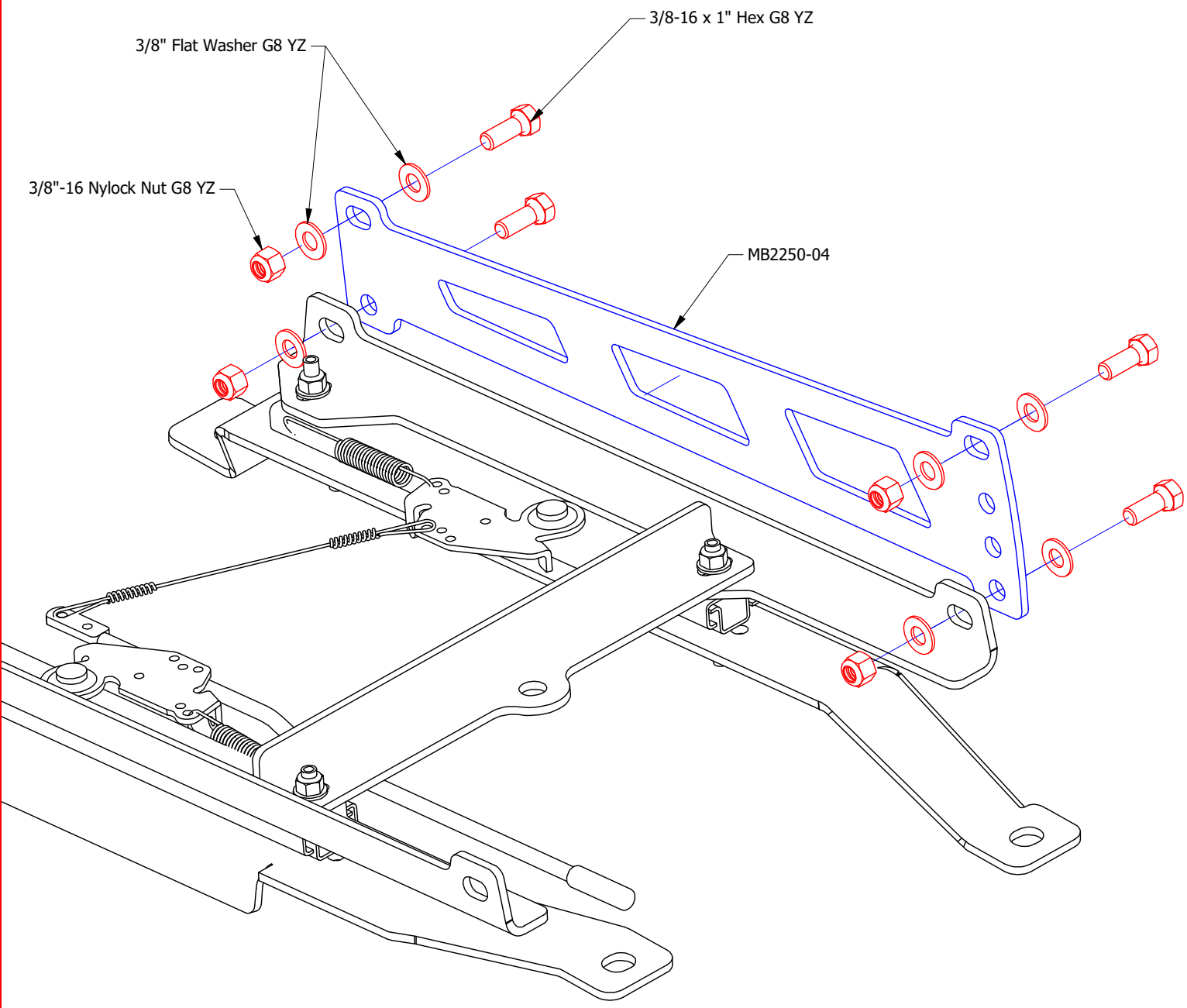

MB2246

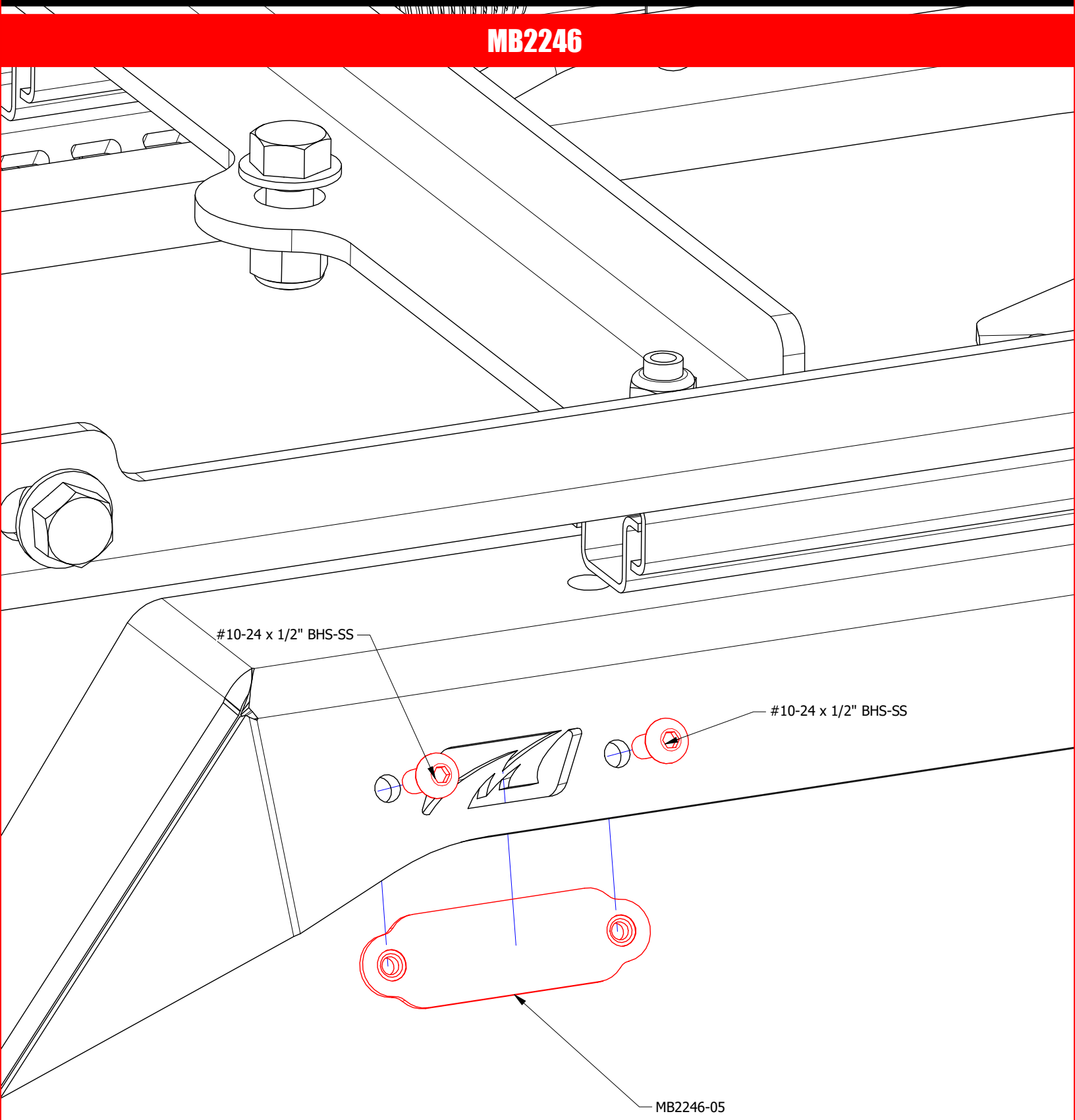

LEGAL DISCLAIMER

Motobilt, Inc. products are designed and manufactured primarily for **OFF-ROAD USE ONLY**. They are not certified or approved for street or highway use and may not comply with vehicle safety standards or regulations. Vehicle modifications, including the installation of Motobilt, Inc. products, may alter the handling, performance, and durability of a vehicle.

By purchasing, installing, or using any Motobilt, Inc. product, the purchaser and installer expressly acknowledge and agree to the following terms:

1. ASSUMPTION OF RISK
The purchaser and installer understand and accept that the installation and use of aftermarket products involve inherent risks, including but not limited to vehicle damage, property damage, serious injury, or death. All such risks are voluntarily assumed.

2. NO WARRANTY OF SAFETY
Motobilt, Inc. makes no representations, warranties, or guarantees, express or implied, regarding the safety, performance, or structural integrity of its products. Motobilt, Inc. products are not intended to prevent injury or death in the event of an accident, rollover, or collision.

3. INSTALLATION RESPONSIBILITY
Some Motobilt products require advanced fabrication, cutting, or welding skills. Others may require specialized tools or mechanical knowledge. Motobilt, Inc. is not responsible for improper installation, modification, or misuse of its products. Professional installation by a qualified individual is strongly recommended.

4. COMPLIANCE WITH LAWS AND REGULATIONS
The purchaser and installer are solely responsible for ensuring that the vehicle and installed products comply with all applicable local, state, and federal laws and safety regulations. Vehicle modifications may void factory warranties and may render the vehicle illegal for use on public roads.

5. MAINTENANCE AND INSPECTION
All products should be inspected regularly for signs of wear, fatigue, or damage. Continued use of damaged or improperly installed equipment increases the risk of failure and potential injury. The responsibility for inspection and maintenance rests solely with the owner and operator.

6. WARRANTY DISCLAIMER
Unless expressly stated in a written limited warranty issued by Motobilt, Inc. for a specific product, all Motobilt, Inc. products are sold "as is" and without express warranties of any kind. If a written limited warranty applies, its terms are exclusive and govern the extent of Motobilt, Inc. obligations.

To the fullest extent permitted by law, Motobilt, Inc. expressly disclaims all implied warranties, including but not limited to implied warranties of merchantability, fitness for a particular purpose, and non-infringement. No oral or written statement by Motobilt, Inc., its employees, dealers, or representatives shall constitute or create any warranty, obligation, or liability beyond what is contained in official written documentation issued by Motobilt, Inc.

7. LIMITATION OF LIABILITY
To the fullest extent permitted by law, Motobilt, Inc. disclaims all liability for any direct, indirect, incidental, consequential, or punitive damages arising out of the purchase, installation, or use of its products. This includes, but is not limited to, claims for property damage, personal injury, loss of use, or loss of income.

8. USER ACKNOWLEDGMENT
By purchasing, installing, or using Motobilt, Inc. products, the purchaser and installer acknowledge that they have read, understood, and accepted the terms of this disclaimer and voluntarily assume all associated risks.