MB7001 JKU 4 LINK SUSPENSION

Compatible with Year Model (2012-2018)

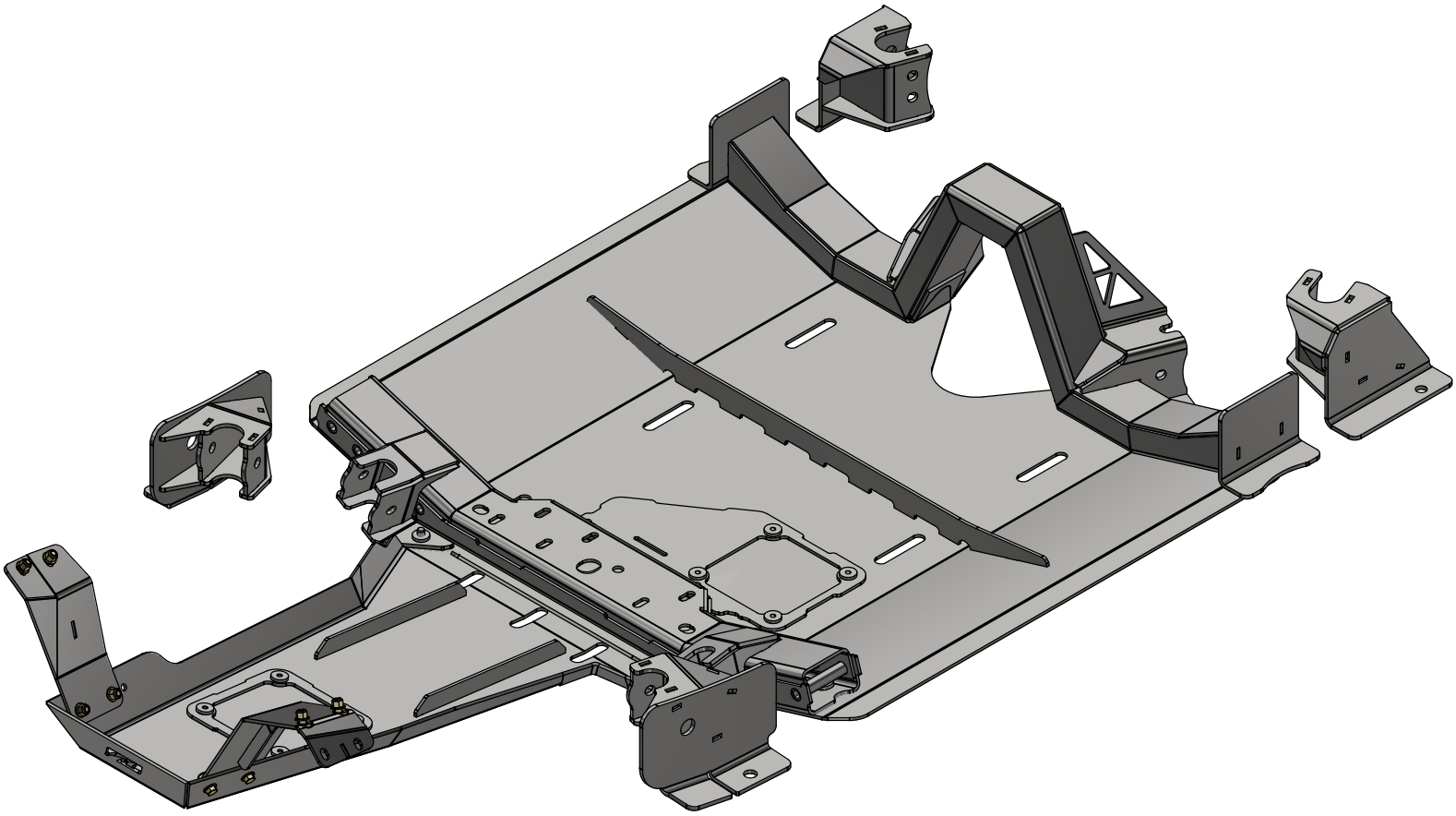

ASSEMBLY INSTRUCTIONS

MB7001 - 4 Link Suspension for JKU

CONTENTS

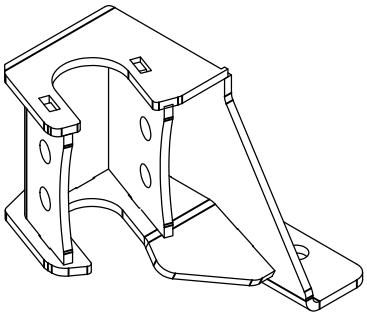

MB3030-W02
Qty 1

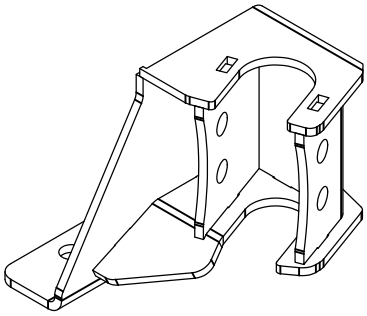

MB3030-W01
Qty 1

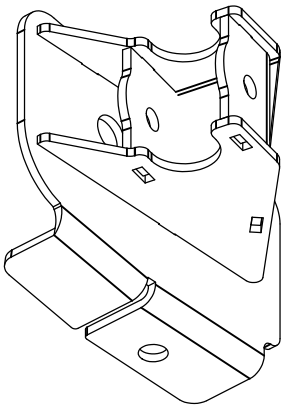

MB3029-W02
Qty 1

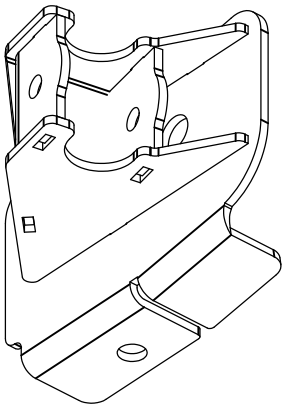

MB3029-W01
Qty 1

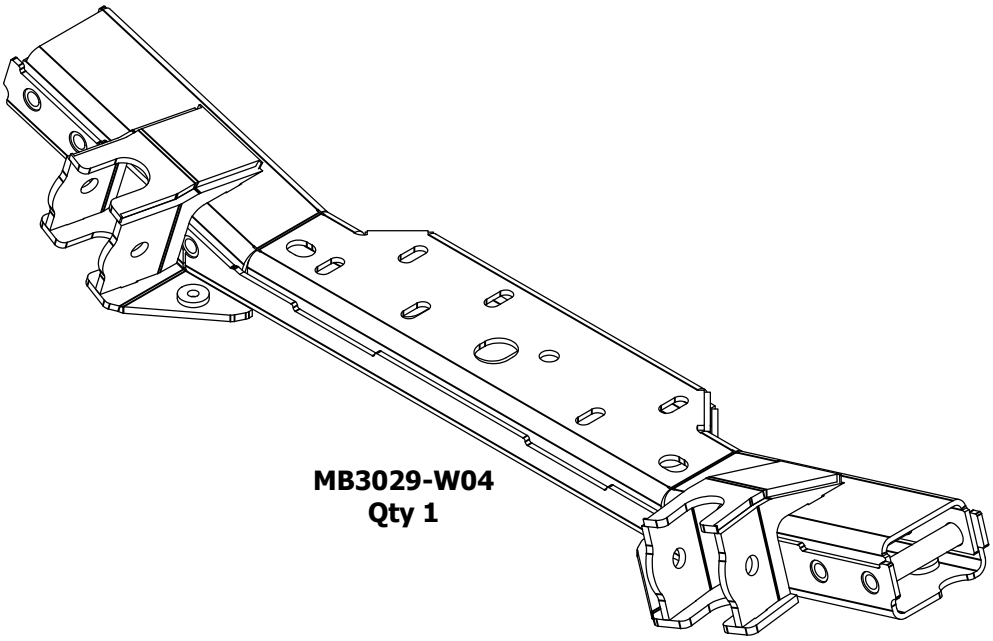

MB3029-W04
Qty 1

MB7001 - 4 Link Suspension for JKU

CONTENTS

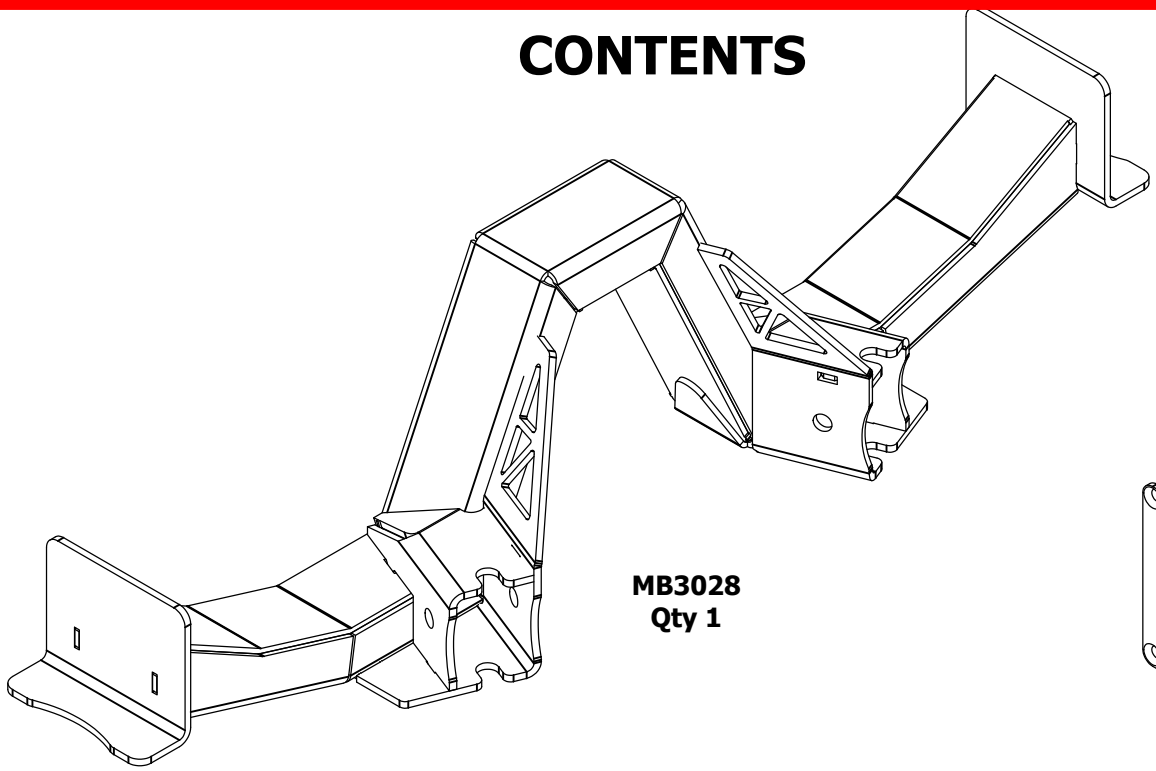

MB3028
Qty 1

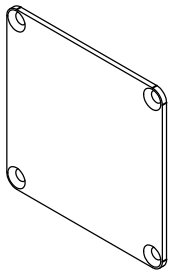

MB3031-01 C
Qty 1

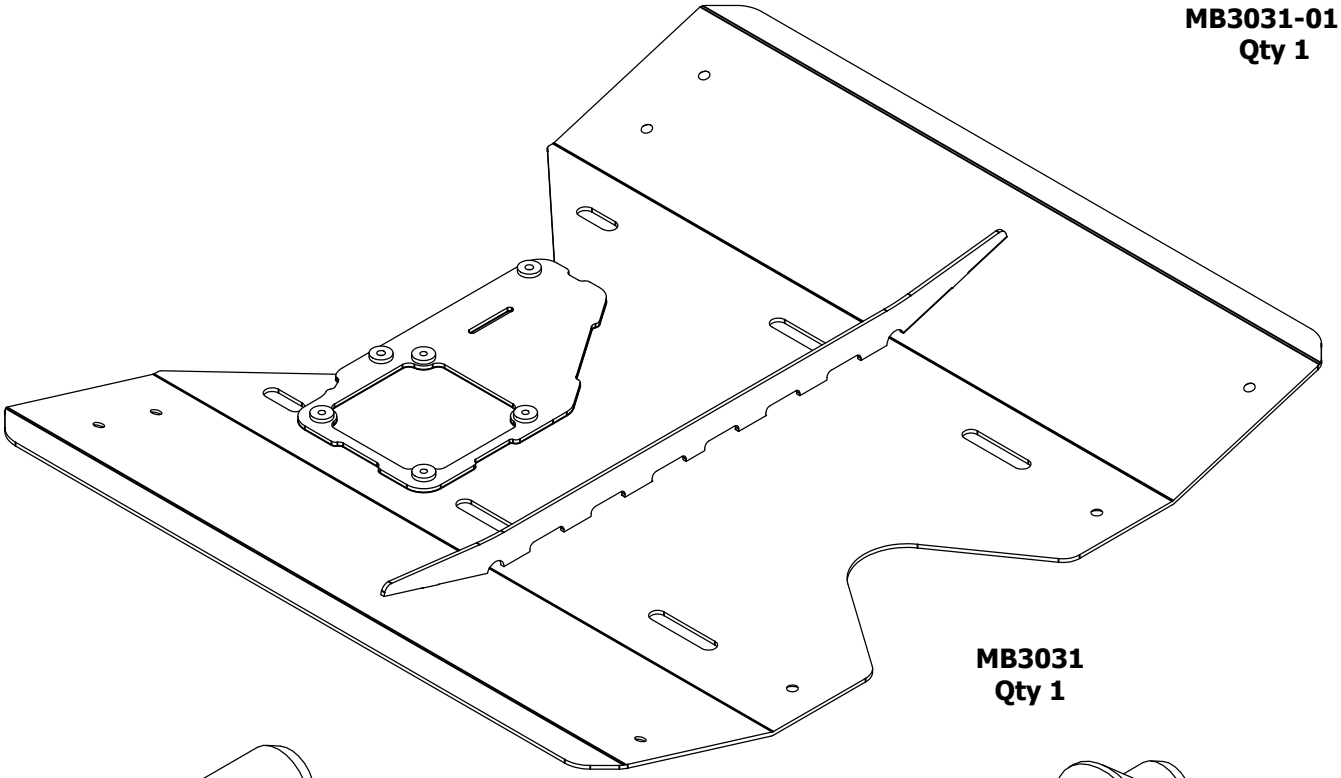

MB3031
Qty 1

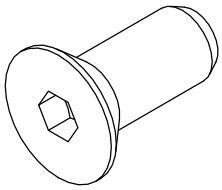

7/16-14 x 1" FHS-BO
Qty 13

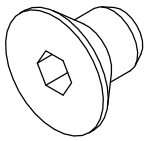

3/8-16 x 1/2" FHS-BO
Qty 8

MB7001 - 4 Link Suspension for JKU

CONTENTS

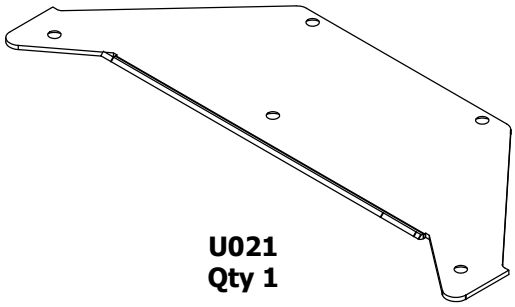

U021
Qty 1

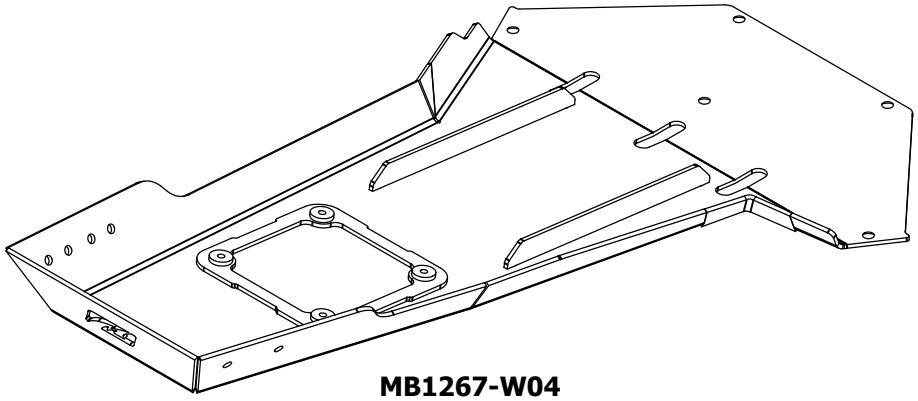

MB1267-W04
Qty 1

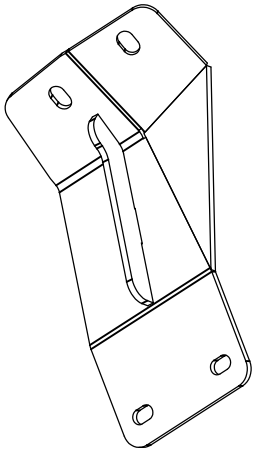

MB1267-W02
Qty 1

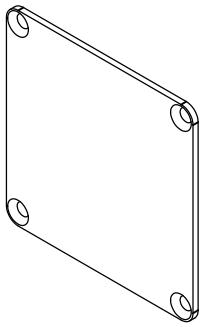

MB1267-01 C
Qty 1

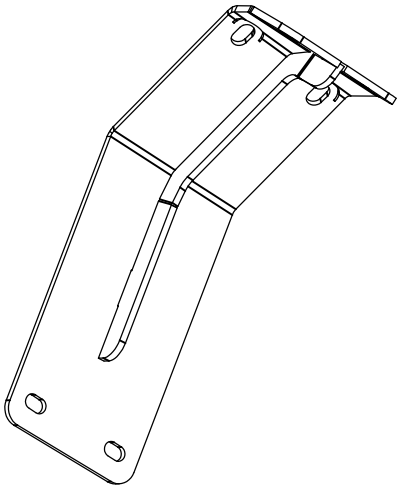

MB1267-W01
Qty 1

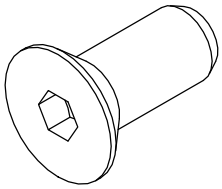

7/16-14 x 1" FHS-BO
Qty 5

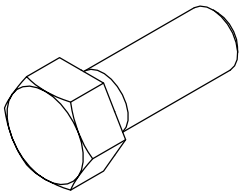

3/8-16 x 1" Hex G8 YZ
Qty 8

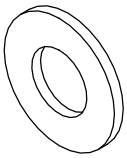

3/8" Flat Washer G8 YZ
Qty 16

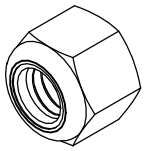

3/8"-16 Nylock Nut G8 YZ
Qty 8

Preparation and Installation Guide

Compatibility: This suspension system ships in bare steel and is designed to replace your suspension with a triangulated front and rear or a triangulated rear and 3 link front. These assembly instructions cover the basic steps of how to install the suspension brackets. This Kit is designed for a 2 5/8" wide joint with a 5/8 bolt. This kit does not require the removal of the Jeep body/tub.

1. **Prepare and Inspect:** Unbox and inspect all components to ensure everything is included and free of damage.

2. **Prep for Install:** Remove all axles and all suspension and follow the instructions on what parts need to be cut from frame.

3. **Fit Up and Weldout:** Attach all the brackets to the frame and tack weld to ensure proper suspension travel. Fully weld brackets to frame after ensuring suspension travel is not impeded.

4. **Hardware:** This Kit is designed to use a 5/8" x 4 1/2" Grade 8 bolt combined with washers and a locking nut on all the suspension brackets.

5. **Exhaust:** This kit requires exhaust modifications to work with a 4 link front.

Pro Tip: Use STEEL-IT paint, which can be welded through and easily touched up afterward.

For questions or assistance, Please contact Motobilt support. Enjoy your new Motobilt suspension.

MB7001 4 Link suspension for JKU 12-18

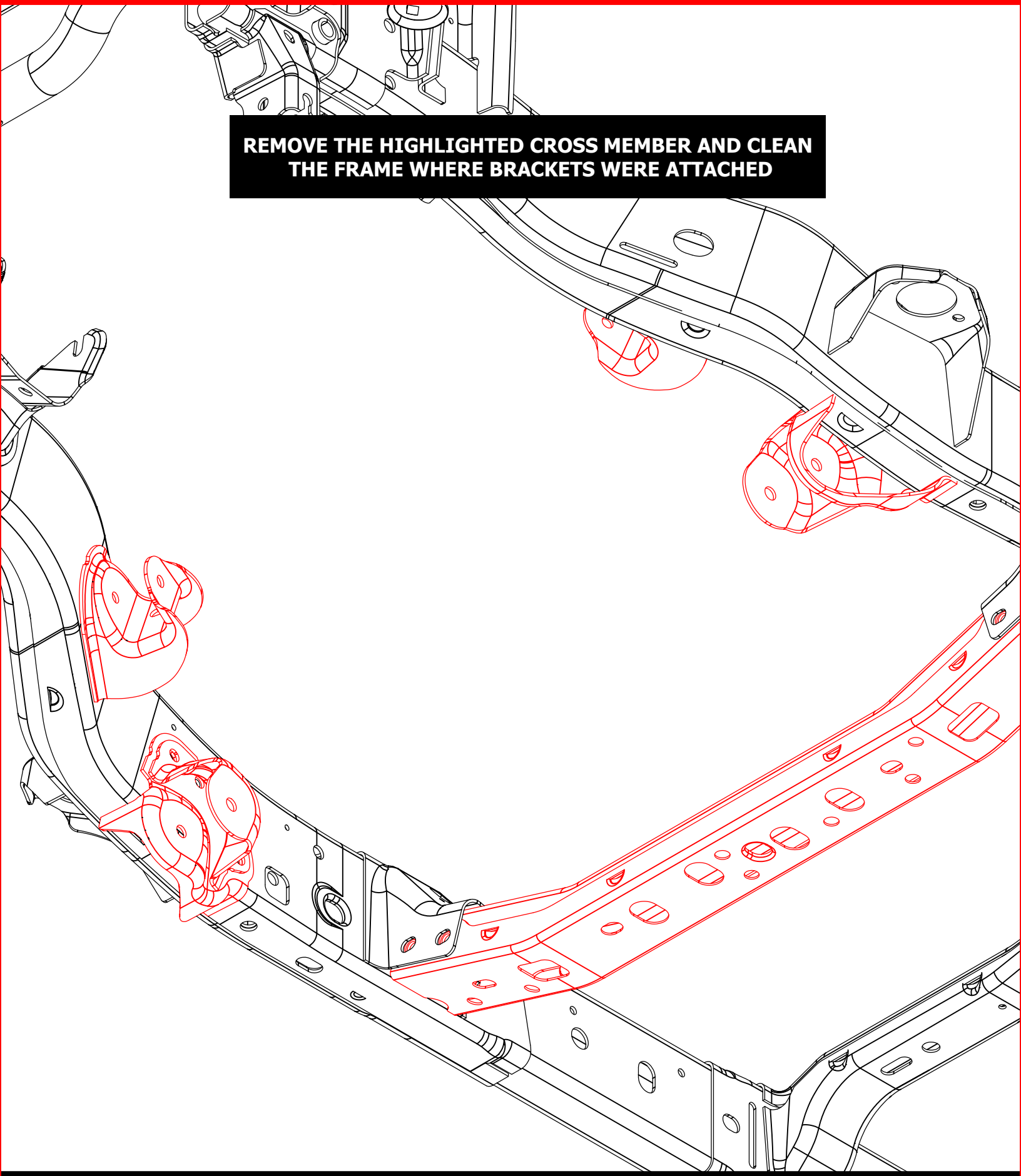

MB7001 4 Link suspension for JKU 12-18

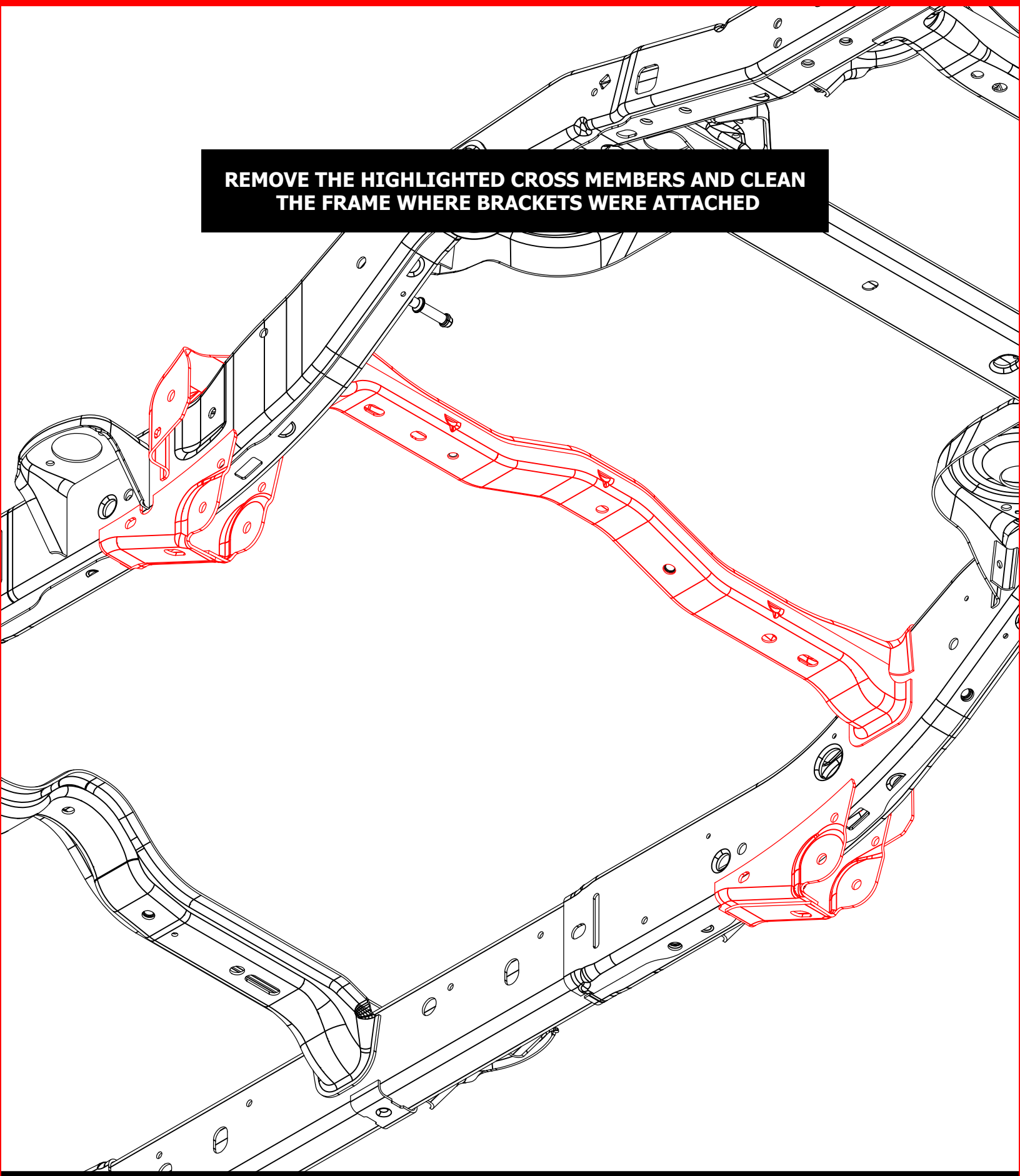

MB7001 4 Link suspension for JKU 12-18

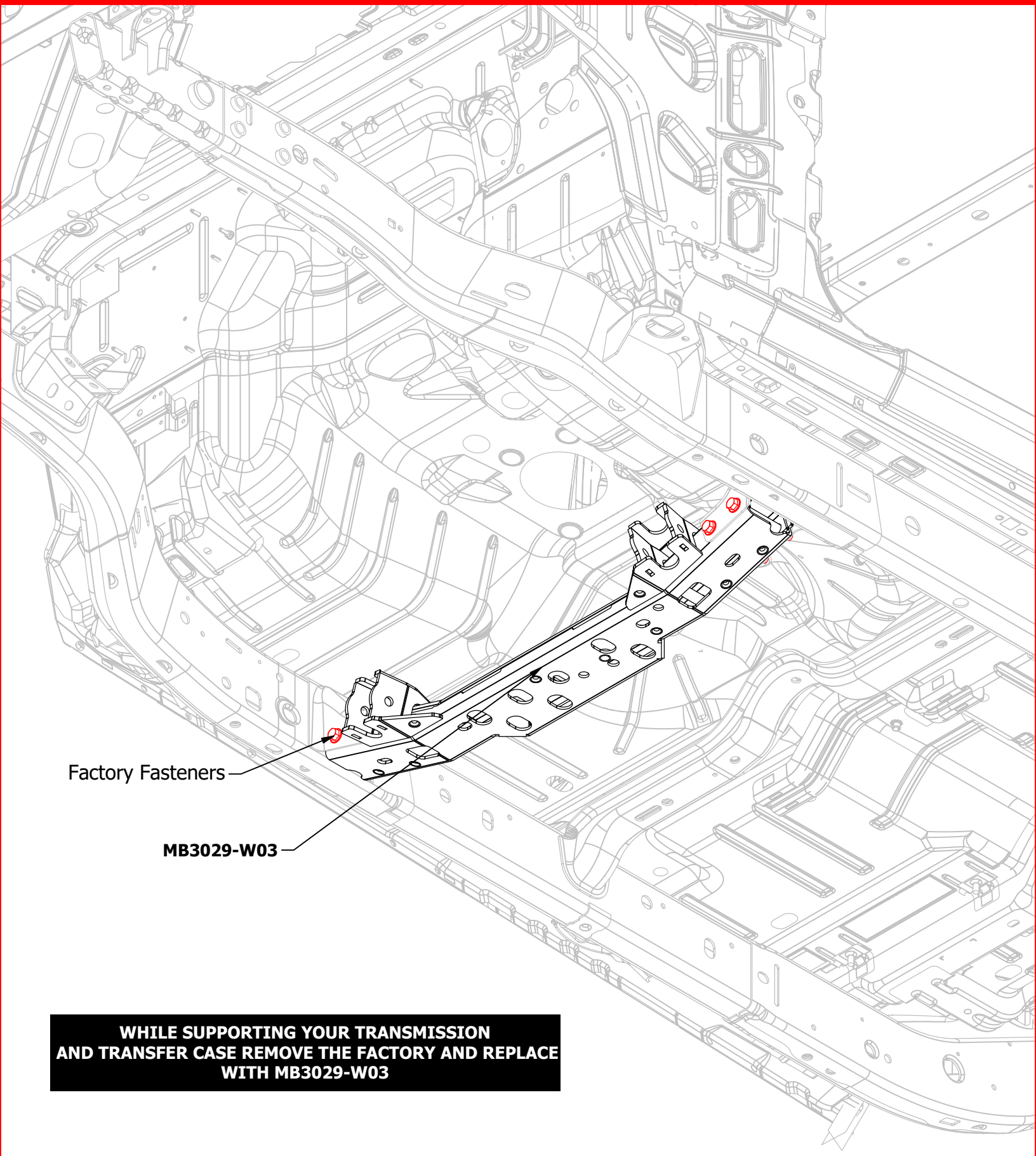

WHILE SUPPORTING YOUR TRANSMISSION AND TRANSFER CASE REMOVE THE FACTORY AND REPLACE WITH MB3029-W03

MB7001 4 Link suspension for JKU 12-18

SECURE MB3028 REAR CROSSMEMBER TO THE SKID PLATE

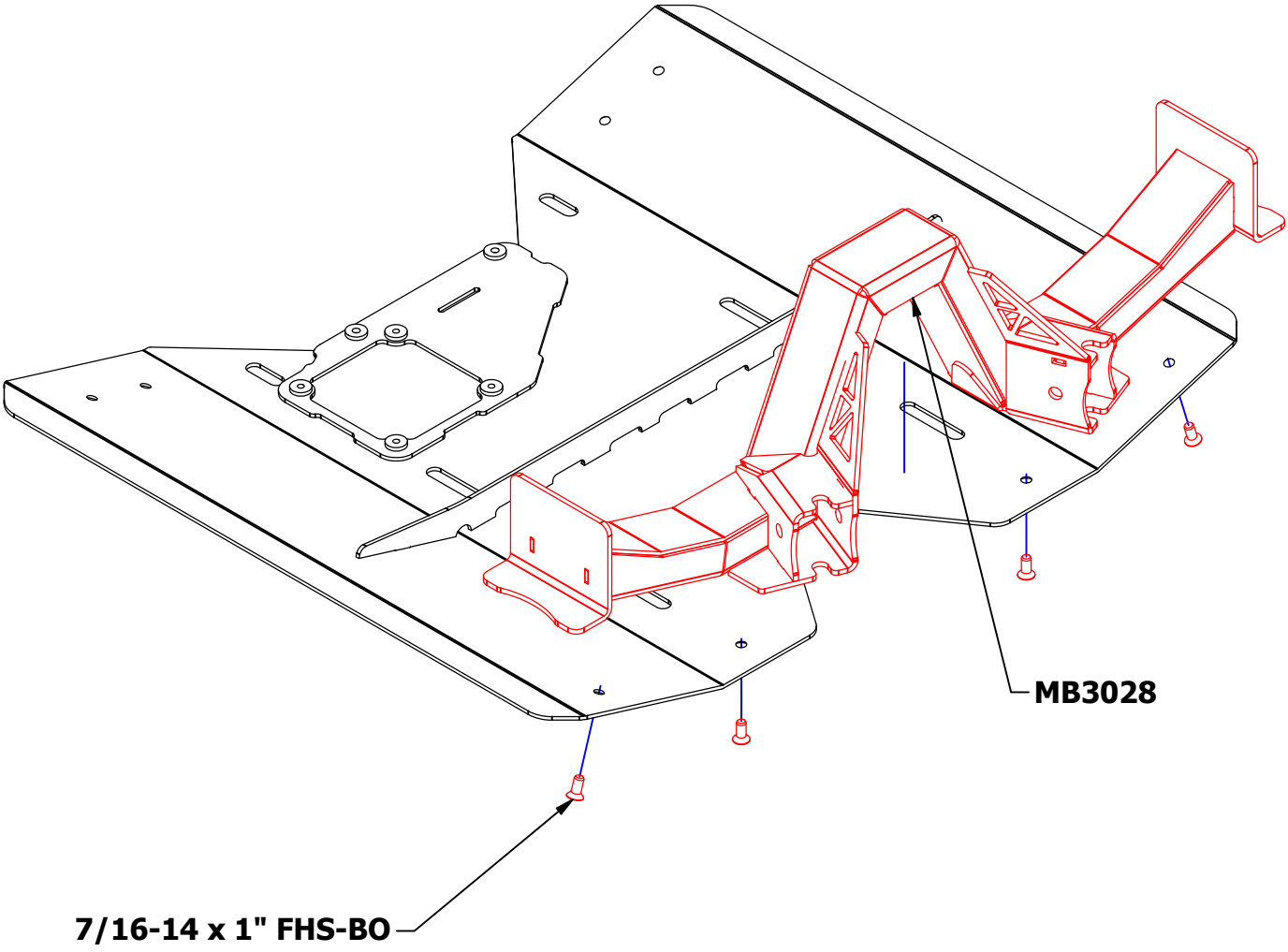

MB7001 4 Link suspension for JKU 12-18

USING THE SKID PLATE AS A JIG TO POSITION THE REAR CROSSMEMBER IN THE FRAME, SECURE THE SKID PLATE TO MB3029 WITH THE PROVIDED HARDWEAR. USE CLAMPS ON THE REAR CROSSMEMEBER TO ENSURE PROPER FIT TO FRAME.

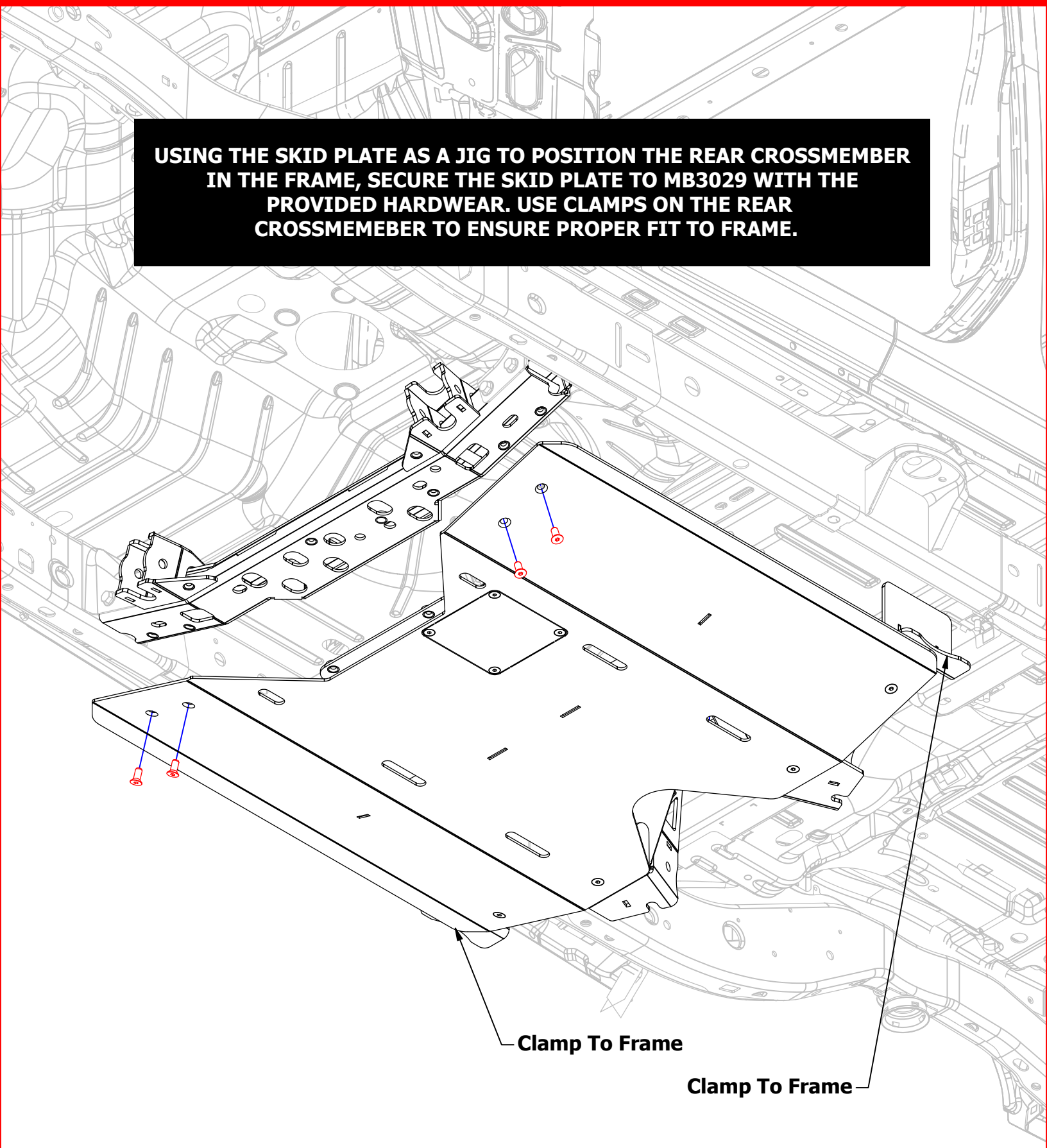

MB7001 4 Link suspension for JKU 12-18

PARTIALLY WELD THE NEW REAR CROSSMEMBER TO THE FRAME SO THAT YOU CAN REMOVE THE SKID PLATE.

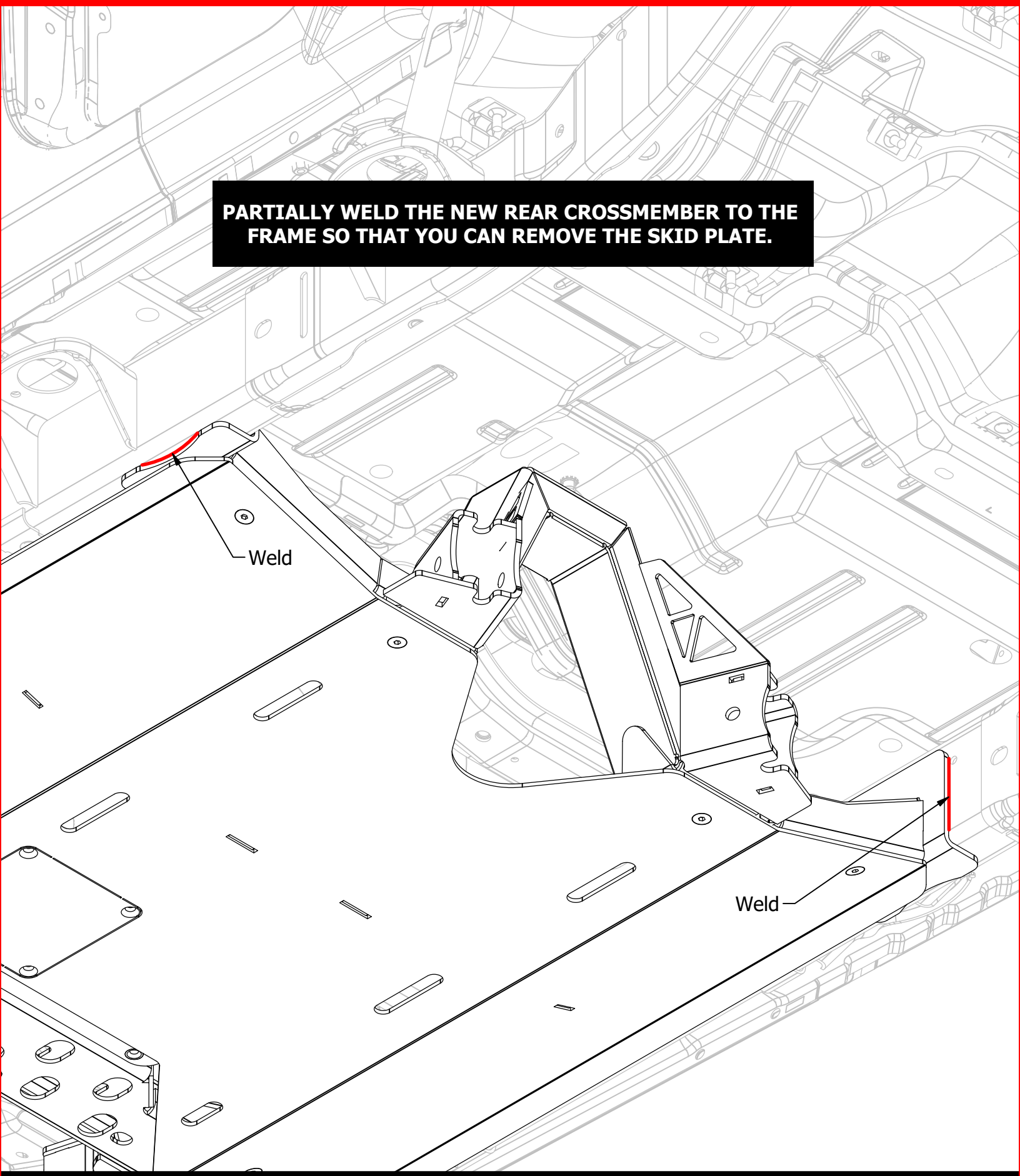

MB7001 4 Link suspension for JKU 12-18

USE THE FACTORY FRAME BOLT TO LOCATE MB3030-W02 ON THE FRAME AND TACK WELD. SINCE THERE IS NO FACTORY TREADED HOLE ON DRIVER SIDE USE MEASUREMENTS FROM PASSENGER SIDE AND MATCH ON MB3030-W01.

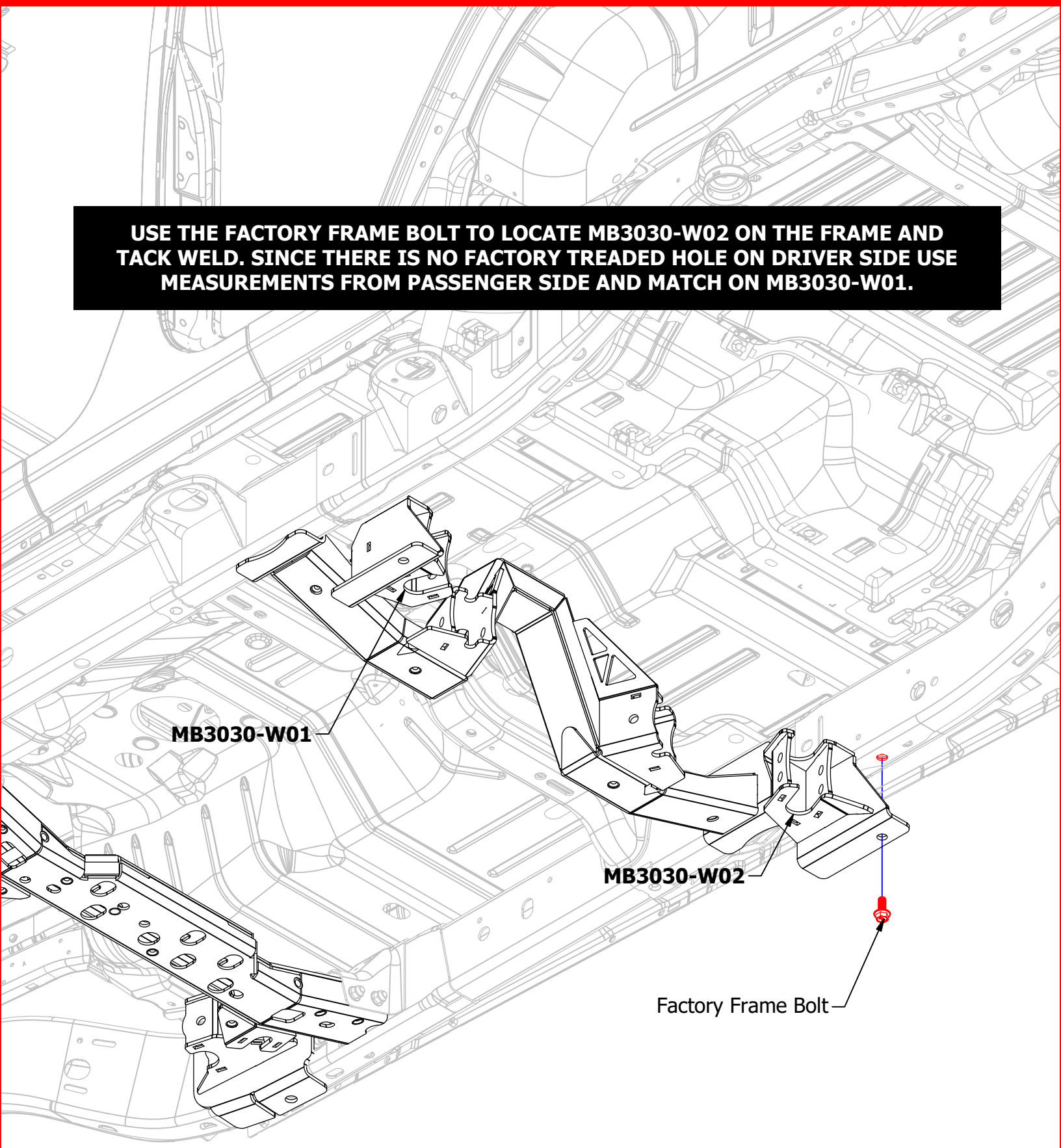

MB7001 4 Link suspension for JKU 12-18

SECURE MB3029-W01 AND MB3029-W02 TO THE FRAME USING THE FACTORY FLANGE BOLT AND THREADED HOLE IN THE FRAME.

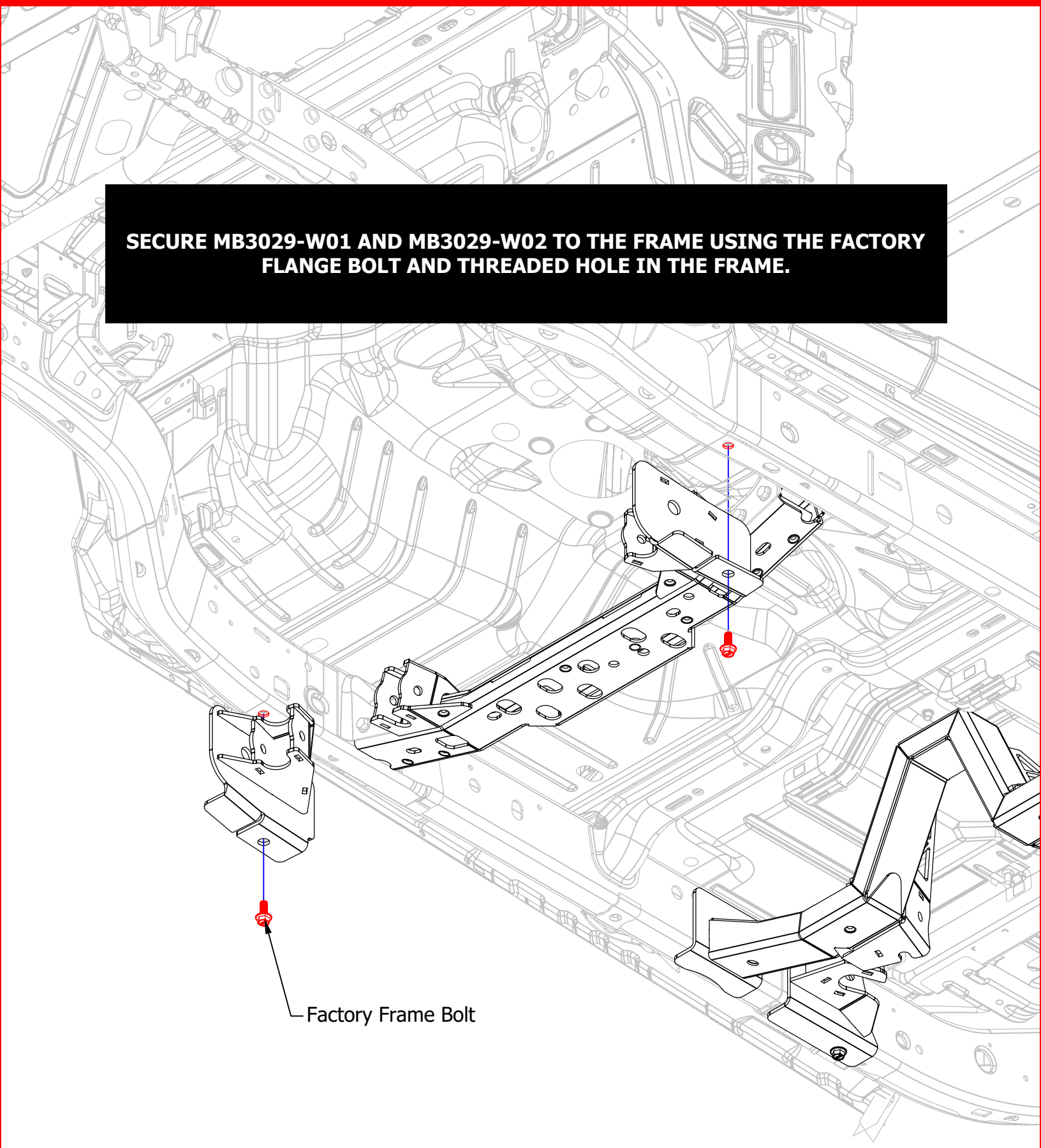

MB7001 4 Link suspension for JKU 12-18

AFTER CYCLING YOUR SUSPENSION WELD ALL THE BACKING PLATES TO THE FRAME

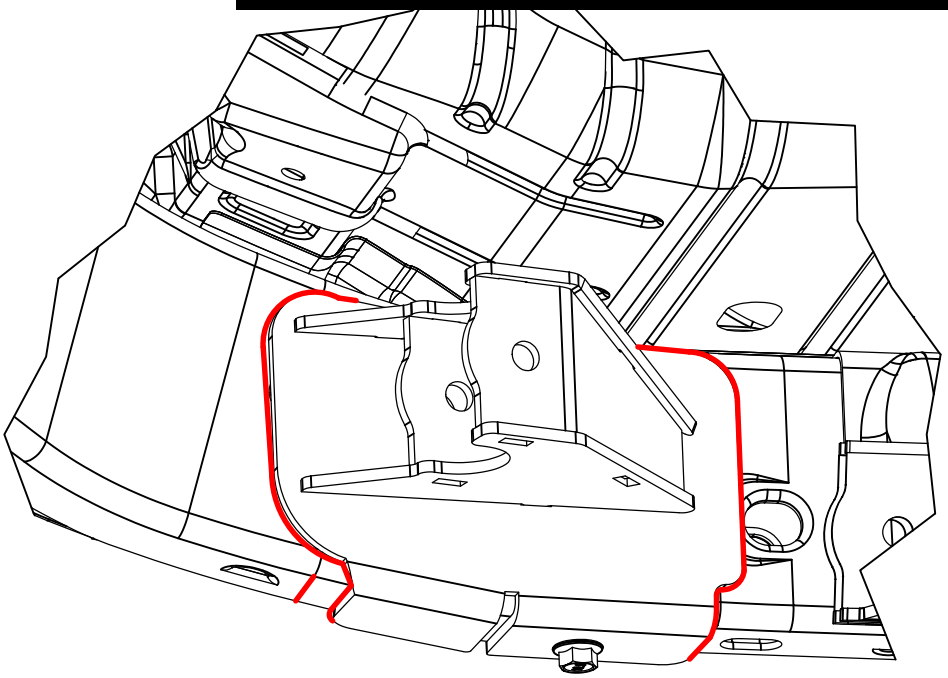

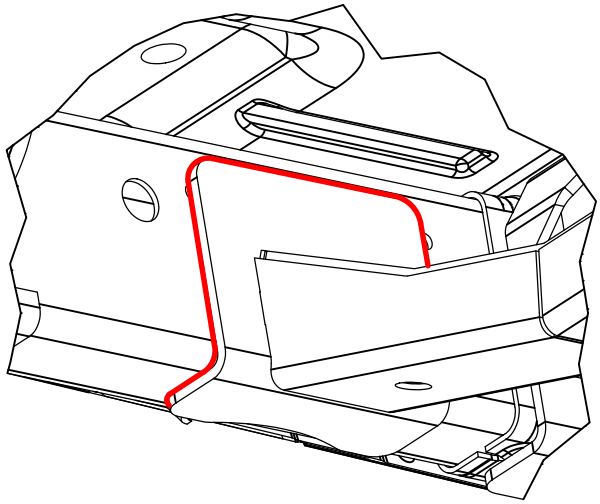

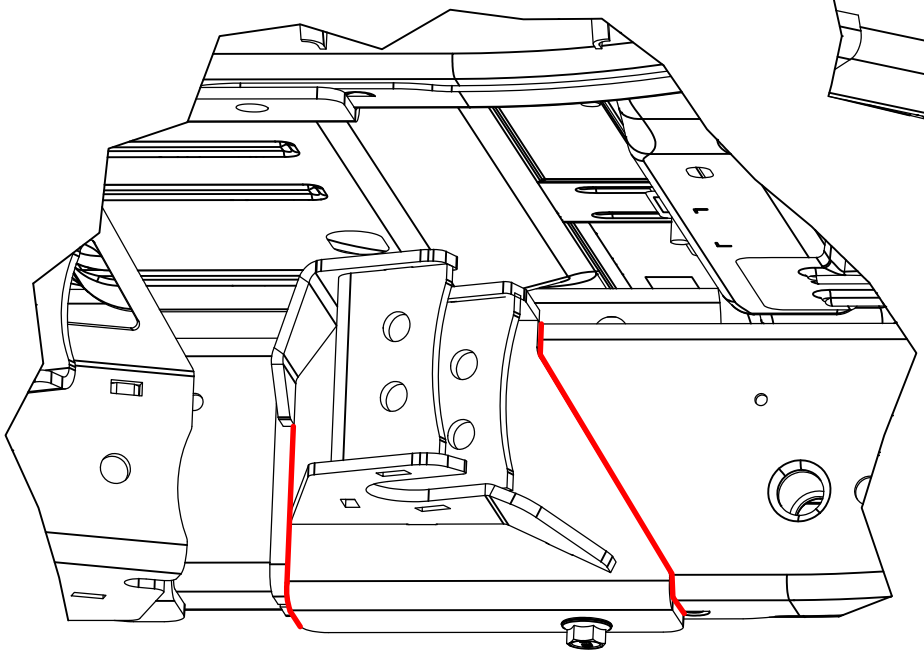

MB7001 4 Link suspension for JKU 12-18

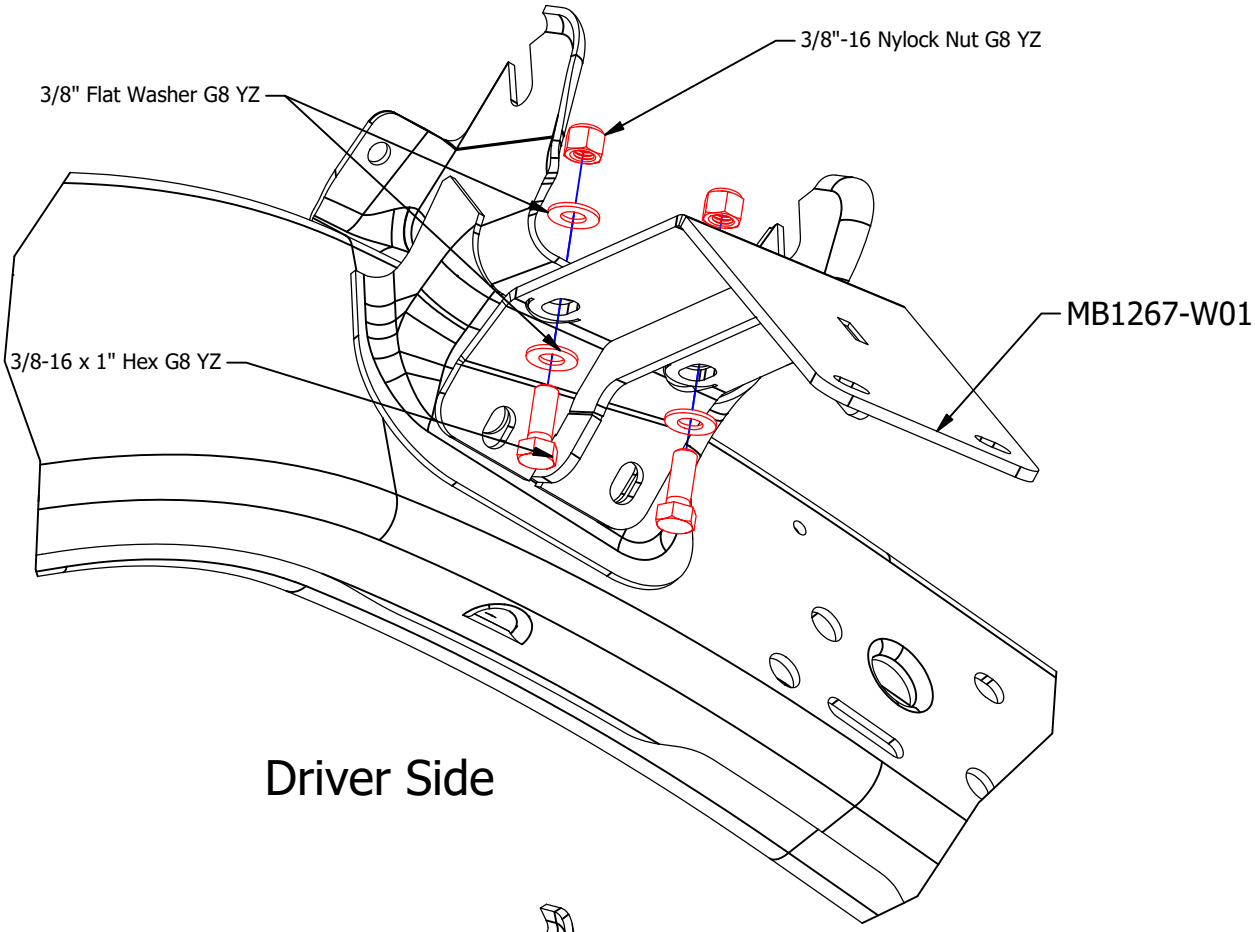

Driver Side

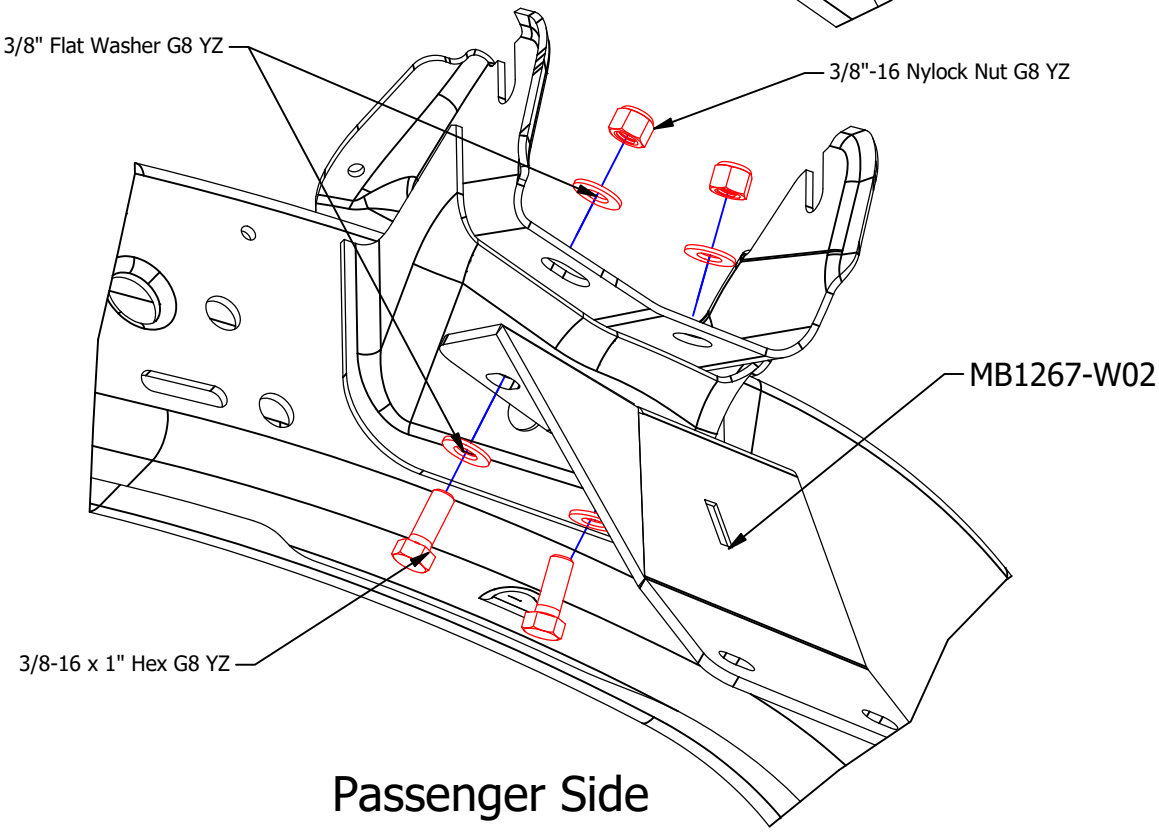

Passenger Side

MB7001 4 Link suspension for JKU 12-18

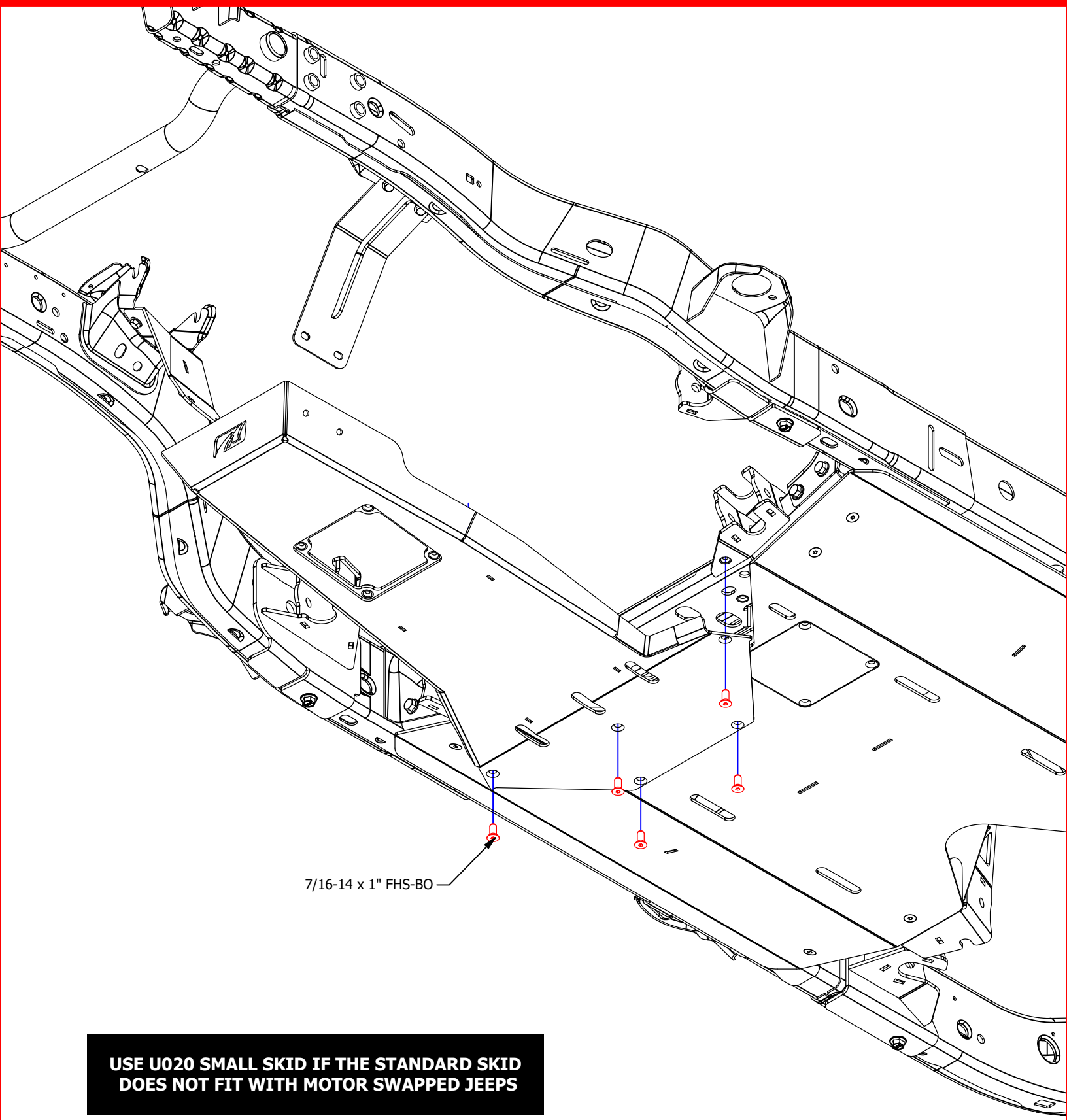

USE U020 SMALL SKID IF THE STANDARD SKID DOES NOT FIT WITH MOTOR SWAPPED JEEPS

MB7001 4 Link suspension for JKU 12-18

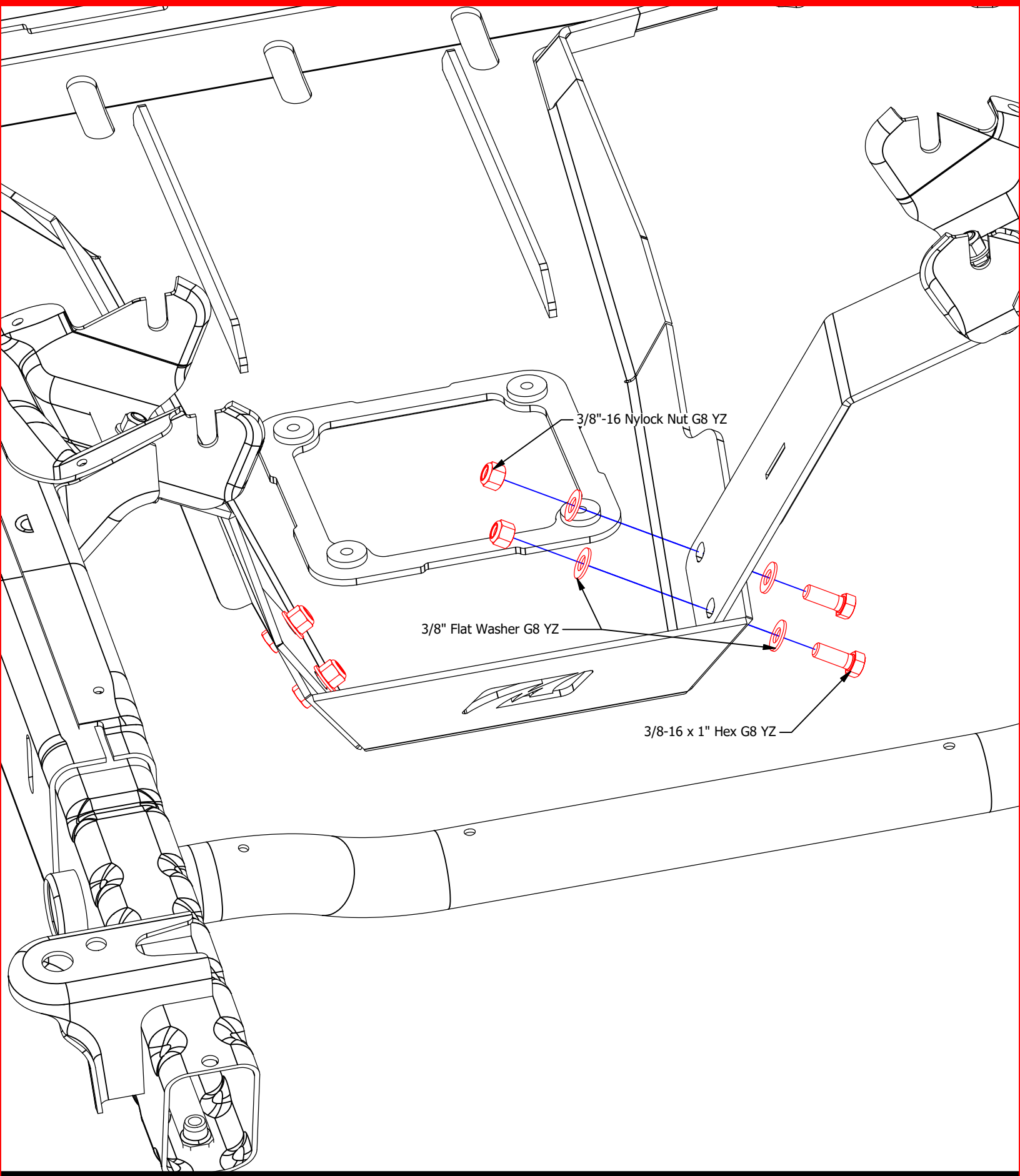

MB7001 4 Link suspension for JKU 12-18

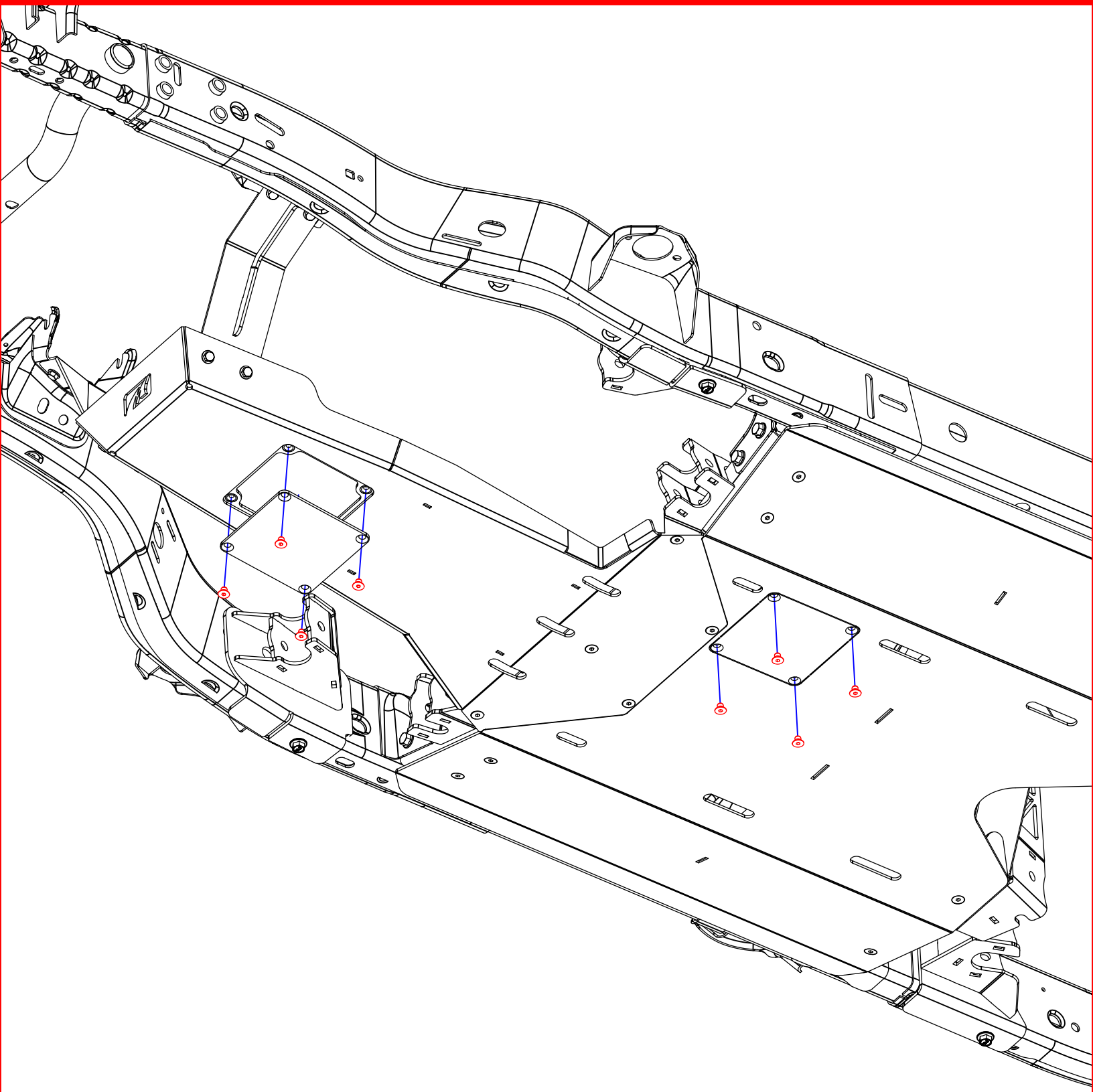

MB7001 4 Link suspension for JKU 12-18

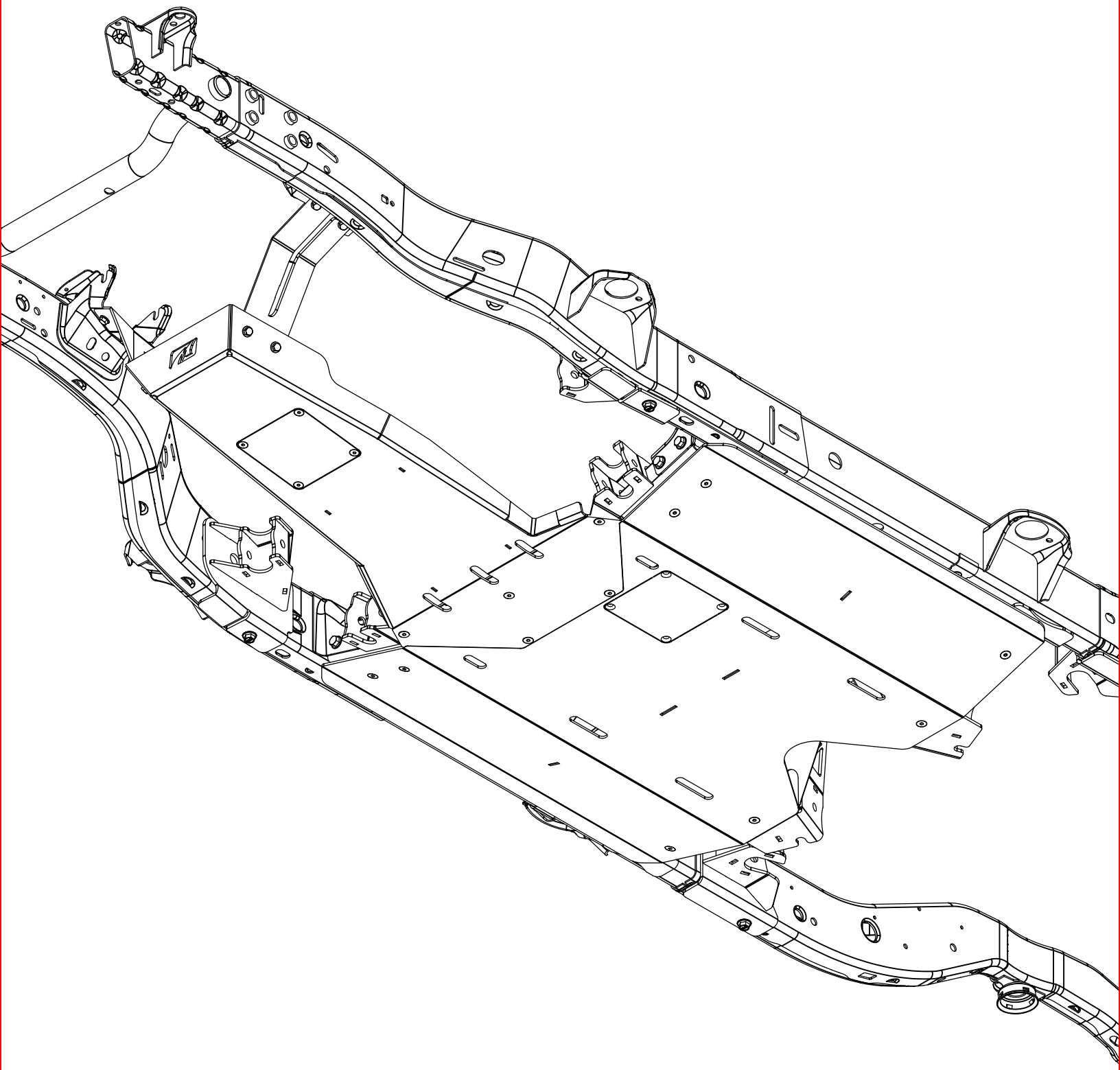

LEGAL DISCLAIMER

Motobilt, Inc. products are designed and manufactured primarily for **OFF-ROAD USE ONLY**. They are not certified or approved for street or highway use and may not comply with vehicle safety standards or regulations. Vehicle modifications, including the installation of Motobilt, Inc. products, may alter the handling, performance, and durability of a vehicle.

By purchasing, installing, or using any Motobilt, Inc. product, the purchaser and installer expressly acknowledge and agree to the following terms:

1. ASSUMPTION OF RISK
The purchaser and installer understand and accept that the installation and use of aftermarket products involve inherent risks, including but not limited to vehicle damage, property damage, serious injury, or death. All such risks are voluntarily assumed.

2. NO WARRANTY OF SAFETY
Motobilt, Inc. makes no representations, warranties, or guarantees, express or implied, regarding the safety, performance, or structural integrity of its products. Motobilt, Inc. products are not intended to prevent injury or death in the event of an accident, rollover, or collision.

3. INSTALLATION RESPONSIBILITY
Some Motobilt products require advanced fabrication, cutting, or welding skills. Others may require specialized tools or mechanical knowledge. Motobilt, Inc. is not responsible for improper installation, modification, or misuse of its products. Professional installation by a qualified individual is strongly recommended.

4. COMPLIANCE WITH LAWS AND REGULATIONS
The purchaser and installer are solely responsible for ensuring that the vehicle and installed products comply with all applicable local, state, and federal laws and safety regulations. Vehicle modifications may void factory warranties and may render the vehicle illegal for use on public roads.

5. MAINTENANCE AND INSPECTION
All products should be inspected regularly for signs of wear, fatigue, or damage. Continued use of damaged or improperly installed equipment increases the risk of failure and potential injury. The responsibility for inspection and maintenance rests solely with the owner and operator.

6. WARRANTY DISCLAIMER
Unless expressly stated in a written limited warranty issued by Motobilt, Inc. for a specific product, all Motobilt, Inc. products are sold "as is" and without express warranties of any kind. If a written limited warranty applies, its terms are exclusive and govern the extent of Motobilt, Inc. obligations.

To the fullest extent permitted by law, Motobilt, Inc. expressly disclaims all implied warranties, including but not limited to implied warranties of merchantability, fitness for a particular purpose, and non-infringement. No oral or written statement by Motobilt, Inc., its employees, dealers, or representatives shall constitute or create any warranty, obligation, or liability beyond what is contained in official written documentation issued by Motobilt, Inc.

7. LIMITATION OF LIABILITY
To the fullest extent permitted by law, Motobilt, Inc. disclaims all liability for any direct, indirect, incidental, consequential, or punitive damages arising out of the purchase, installation, or use of its products. This includes, but is not limited to, claims for property damage, personal injury, loss of use, or loss of income.

8. USER ACKNOWLEDGMENT
By purchasing, installing, or using Motobilt, Inc. products, the purchaser and installer acknowledge that they have read, understood, and accepted the terms of this disclaimer and voluntarily assume all associated risks.