MB7018 - Assembly Instructions JKU 4 Link Suspension Belly and Engine Skid

# MB7018 JKU 4 Link Suspension Belly and Engine Skid

**Compatible with (MB7000 & 7001 Suspension)**

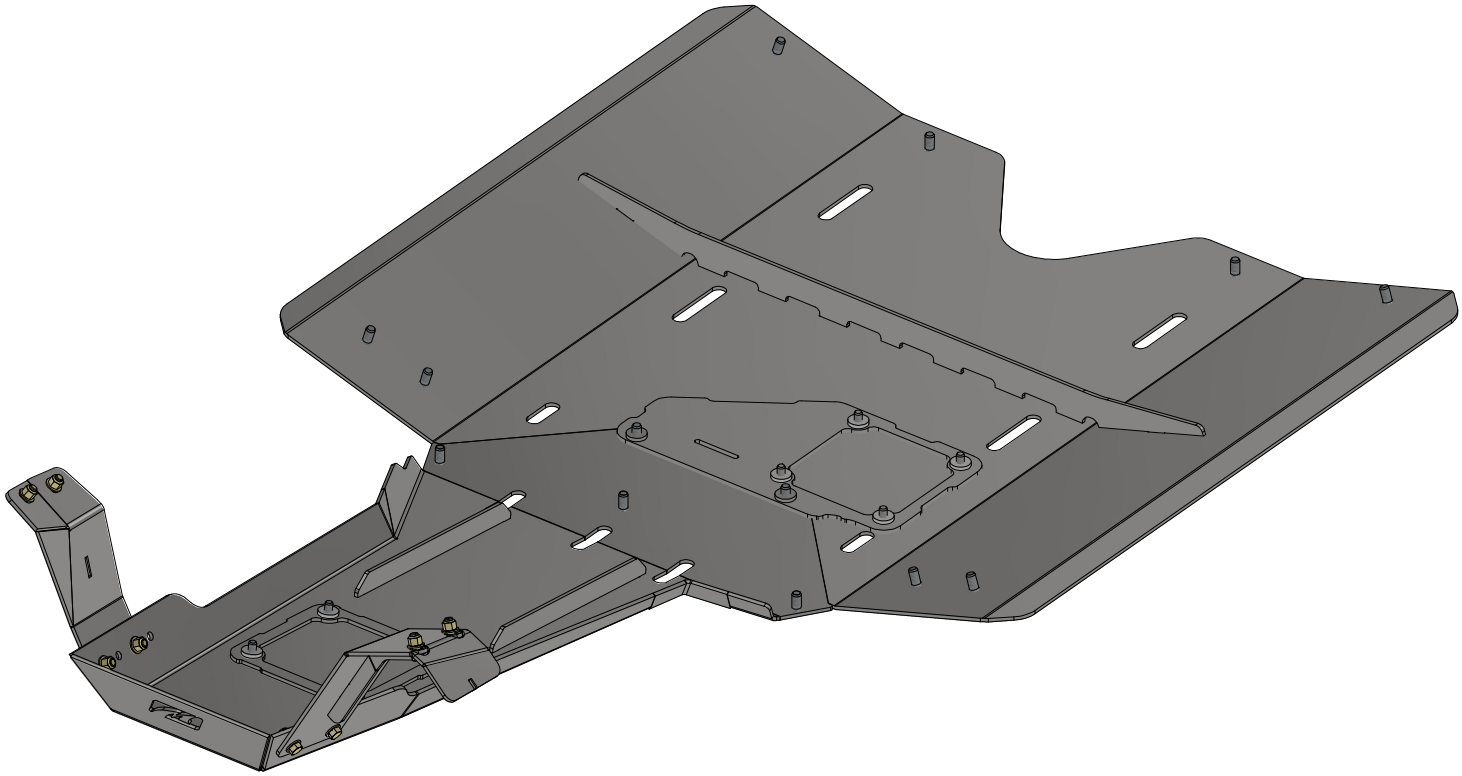

## ASSEMBLY INSTRUCTIONS

# MB7018 - Shipping JKU 4 Link Suspension Belly and Engine Skid

## CONTENTS

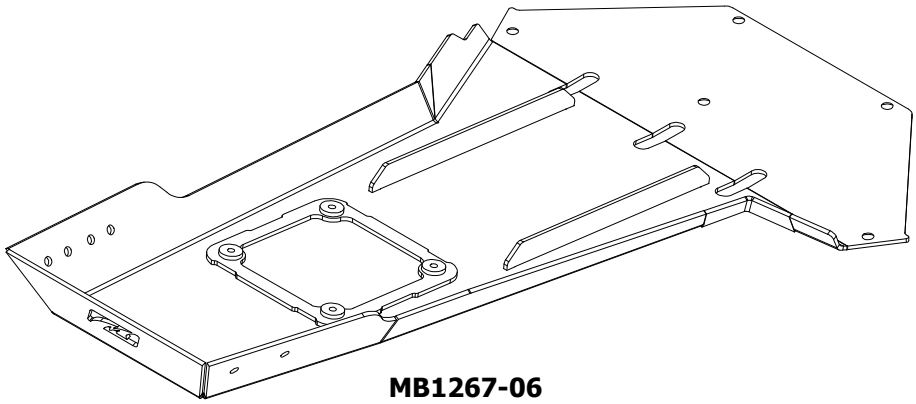

**MB1267-06**
**Qty 1**

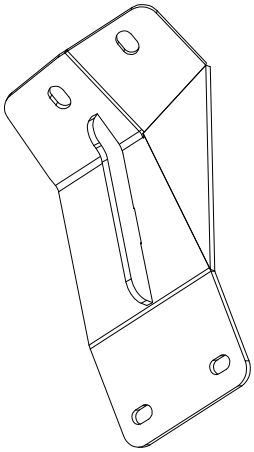

**MB1267-02**
**Qty 1**

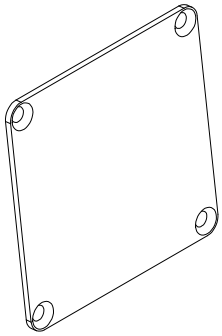

**MB1267-06 C**
**Qty 1**

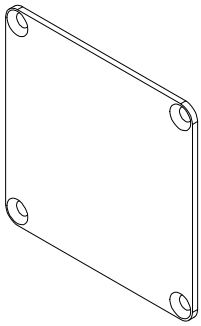

**MB3031-01 C**
**Qty 1**

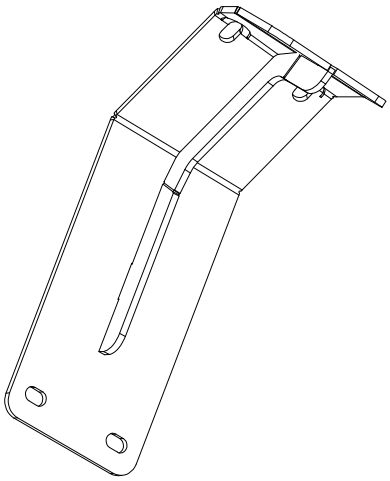

**MB1267-01**
**Qty 1**

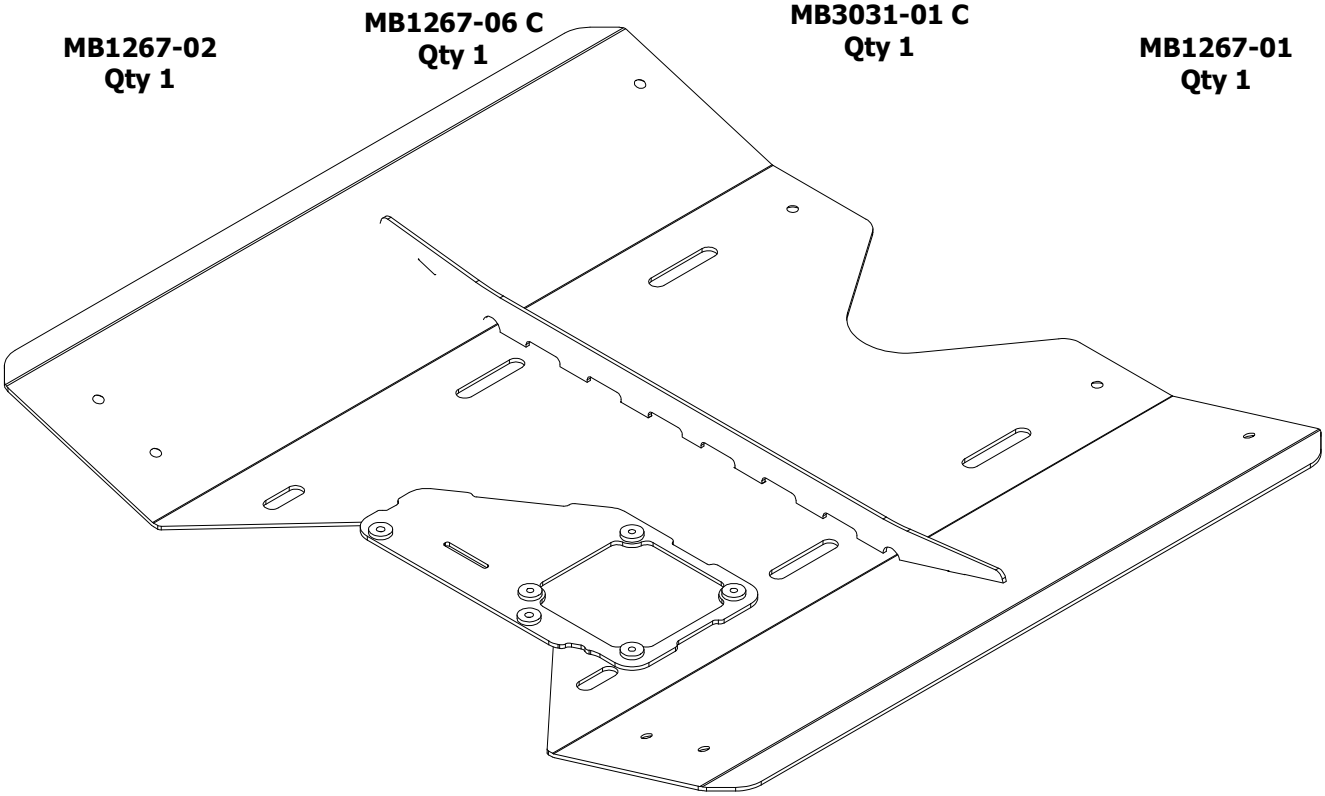

**MB3031-01**
**Qty 1**

# MB7018 - Shipping JKU 4 Link Suspension Belly and Engine Skid

## CONTENTS

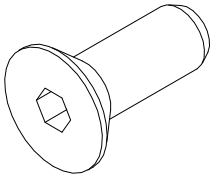

**3/8" - 16 x 1" Countersunk Screw**
**Qty 8**

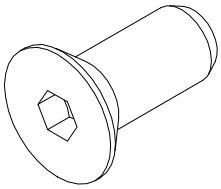

**7/16"-14 x 1" Countersunk Screw**
**Qty 13**

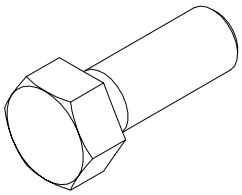

**Hex Bolt, 3/8"-16 x 1" Long**
**Qty 8**

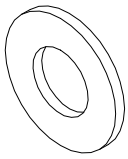

**3/8" Flat Washer**
**Qty 16**

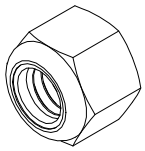

**3/8"-16 Nylon Hex Locknut**
**Qty 8**

# MB7001 - Assembly Instructions JKU 4 Link Suspension Belly and Engine Skid

## ATTACH SKID PLATE WITH FASTENERS

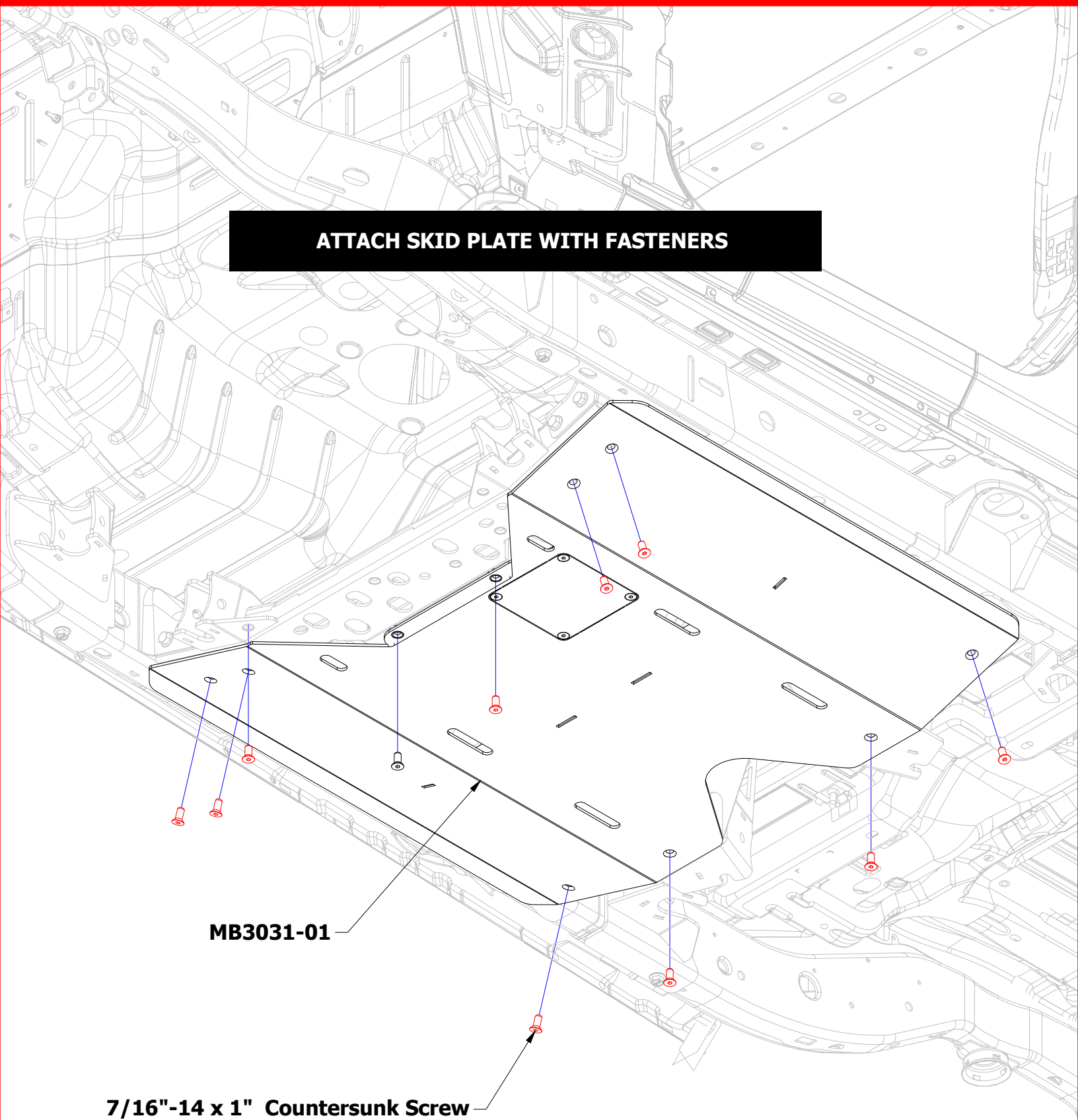

# MB1267 - Assembly Instructions Engine Skid for JK 4 Link Suspension

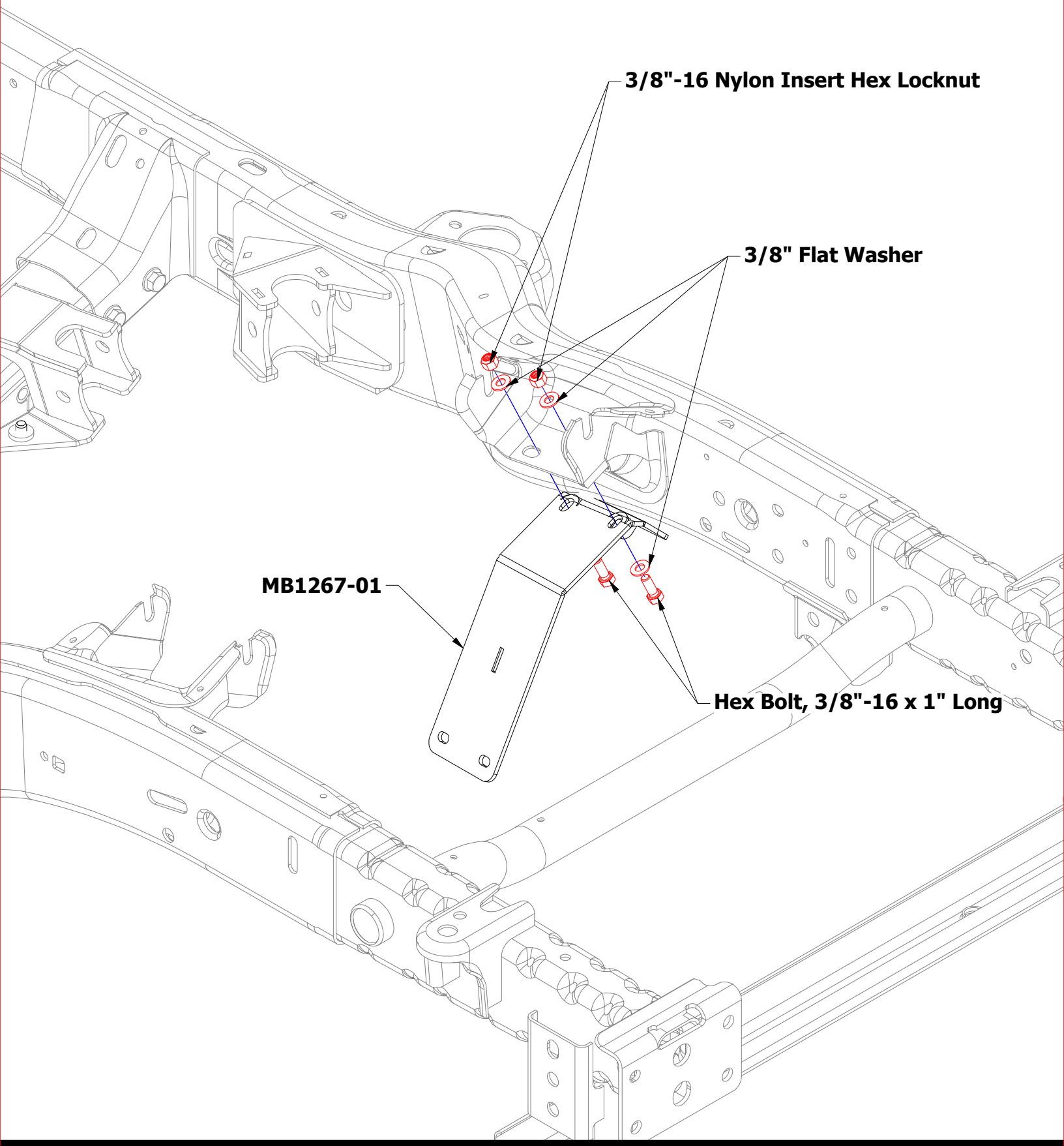

# MB1267 - Assembly Instructions Engine Skid for JK 4 Link Suspension

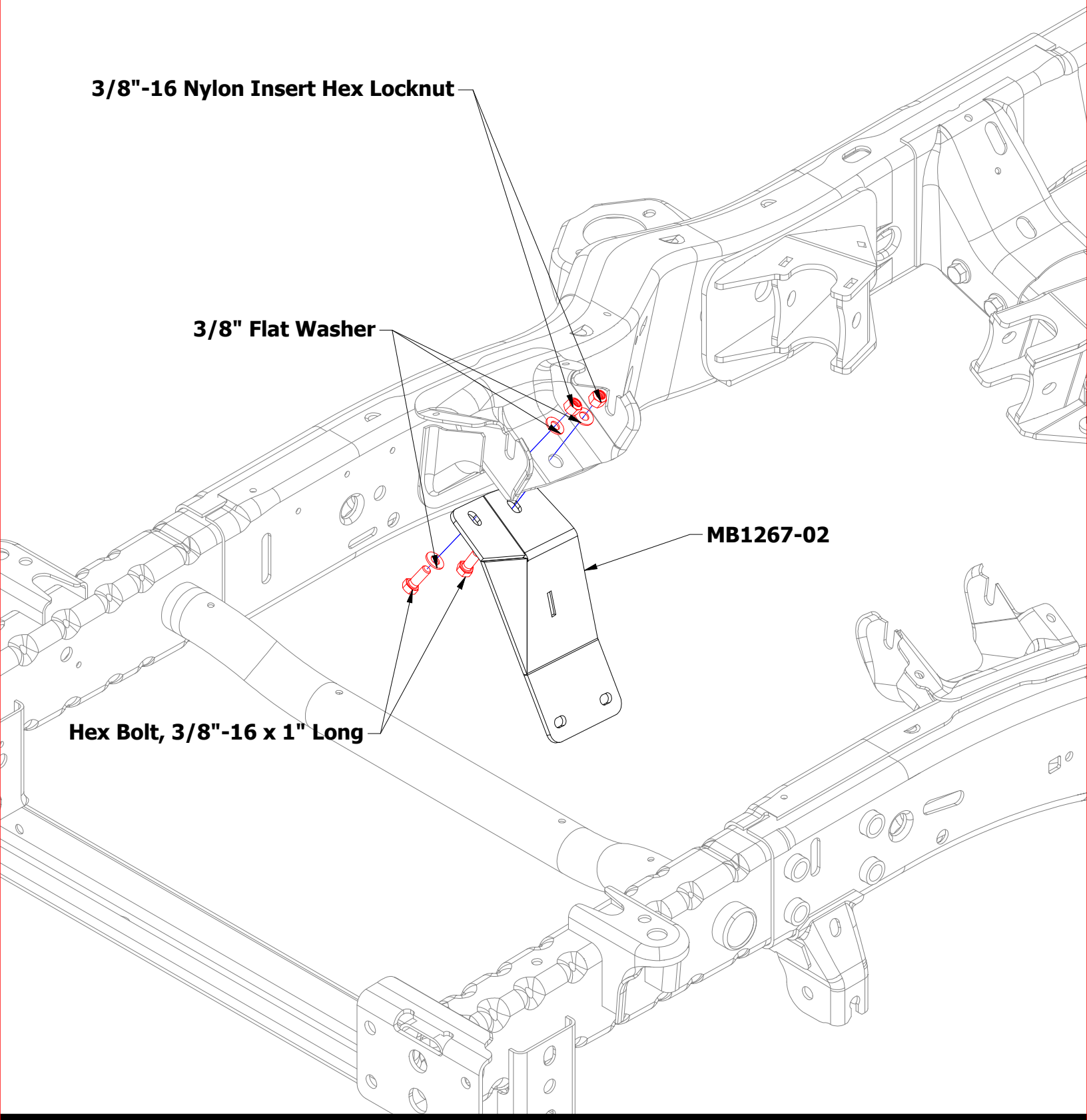

# MB1267 - Assembly Instructions Engine Skid for JK 4 Link Suspension

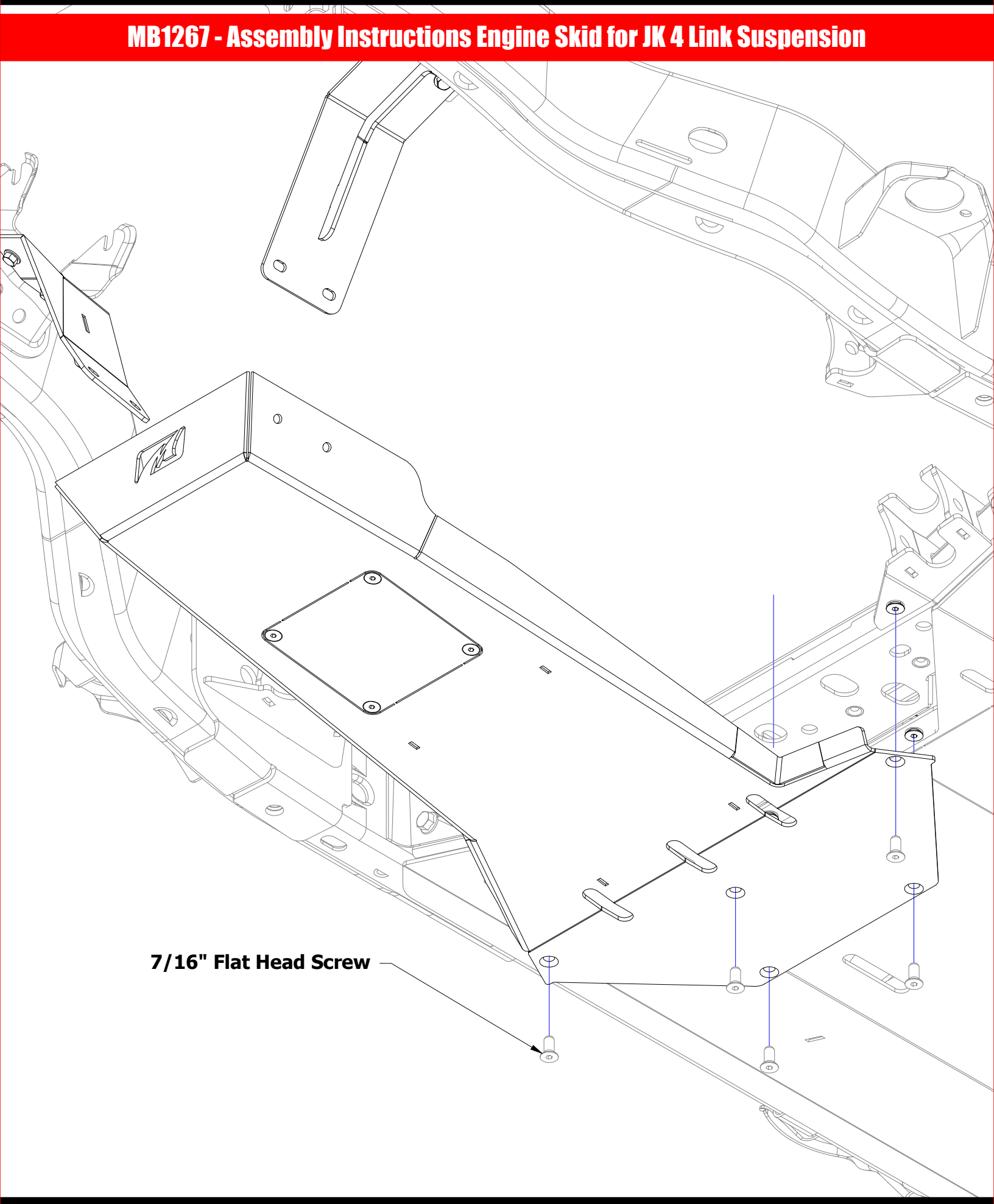

# MB1267 - Assembly Instructions Engine Skid for JK 4 Link Suspension

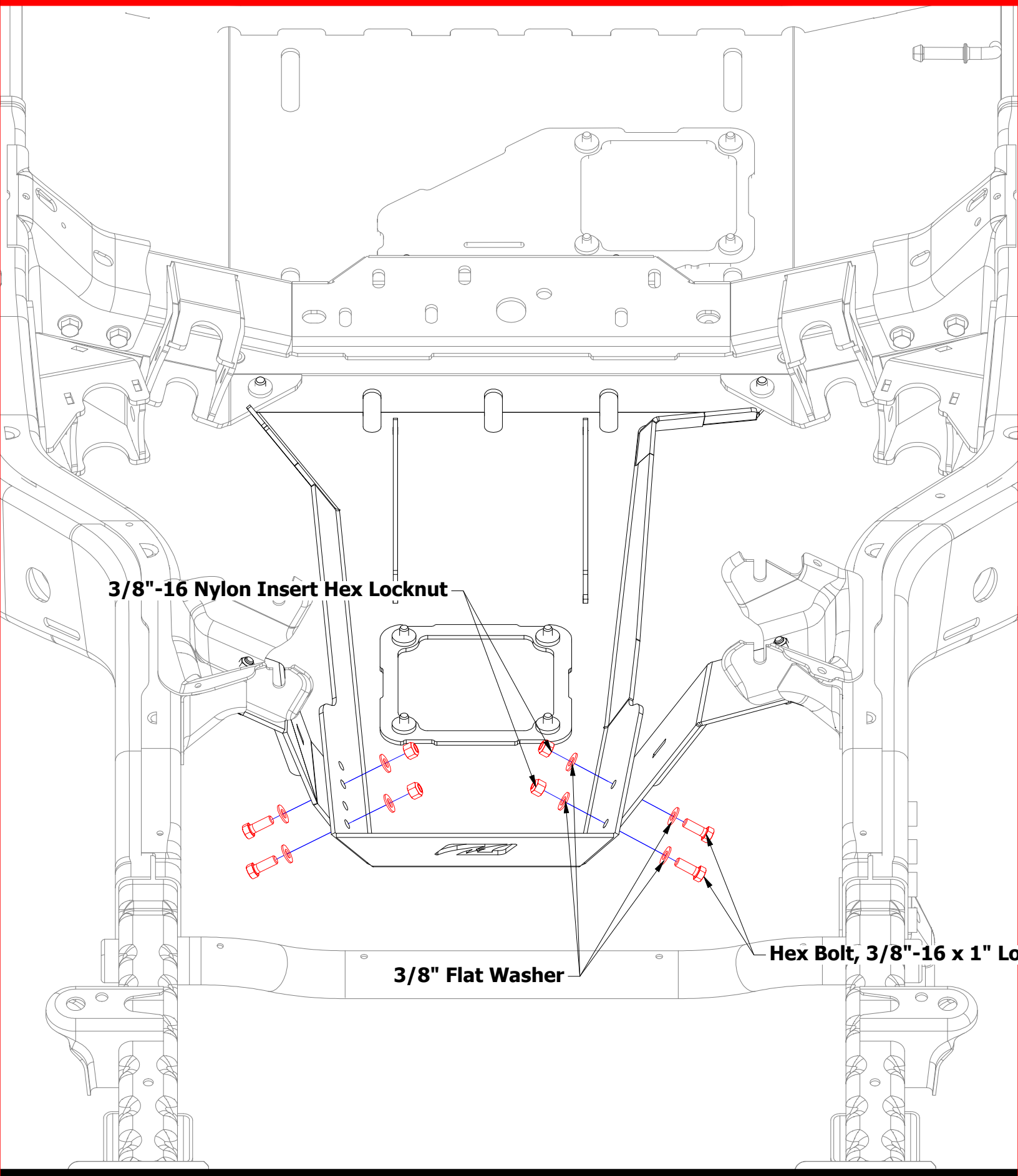

# MB1267 - Assembly Instructions Engine Skid for JK 4 Link Suspension

